amateur radio

Vol. 34, No. 9
SEPTEMBER
1966

25c

Registered at G.P.O., Melbourne, for transmission by post as a periodical

PLASTIC PANEL METERS

P22 2-inch square. Clear Plastic Case, 1¾-inch round mounting hole; 1¼-inch deep.
P22 500 uA. .... £2 P22 1 mA. 37/6

P 25 2¼-inch square. Clear Plastic Case, 2⅛-inch round mounting hole, ¾-inch deep.

P25 50 uA.	82/6	P25 50 mA.	47/6
P25 100 u.A.	72/6	P25 100 mA.	47/6
P25 500 uA.	55/-	P25 15 volt d.c.	47/6
P25 1 mA.	47/6	P25 300v. a.c.	47/6
P25 5 mA.	47/6	P25 S. Meter	50/-
P25 10 mA.	47/6	P25 VU Meter	75/-
P25 20 mA.	47/6		

MR1P 1¼-inch square Clear Plastic, 1-inch round mounting hole; 1¼-inch deep.
MR1P 1 mA. 32/6
MR1P 500 uA. 35/-

MR2P 1¾-inch square. Clear Plastic, 1½-inch round mounting hole; 1½-inch deep.
MR2P 50 uA. 55/-
MR2P 50-0-50 uA. 55/-
MR2P 100 uA. 47/6
MR2P 500 uA. 37/6
MR2P 1 mA., 5 mA., 10 mA., 15 mA., 20 mA., 25 mA., 50 mA., 100 mA., 250 mA., ALL .... Each 35/-
MR2P 15 amp. D.C. 35/-
MR2P 15 volt D.C. 37/6
MR2P VU Meter 45/-
MR2P Stereo Balance 42/6
MR2P 300-30 amp. D.C. 42/6
MR2P "S" Meter 37/6
(S Meter reads S1 to S9 plus 10 to 30 db. FSD 1 mA.)
MR2P 300 volt A.C. 42/6

MR3P 3 x 3⅜-inch square Clear Pastic, 2¾-inch round mounting hole, 1½-inch deep.
MR3P 50-0-50 uA. £4/2/6
MR3P 50 uA. £3/12/6
MR3P 500 uA. £2/17/6
MR3P 1 mA. £2/10/-
MR3P 5 mA., 10 mA., 25 mA., 50 mA., 100 mA., 250 mA., 500 mA. ALL .... 50/- each
MR3P VU Meter £3/17/6
MR3P 300 volt A.C. £2/10/-

MO52 2⅝-inch round face, 2½-inch hole. Black Plastic Case.
MO52 500 uA. 38/6
MO52 1 mA. 36/6

MR52 2½-inch square. Black Plastic, 2-inch round mounting hole, 1¼-inch deep.
MR52 100 uA. 62/6
MR52 500 uA. 47/6
MR52 1 mA., 5 mA., 10 mA., 25 mA., 50 mA., 100 mA., 250 mA., 500 mA. ALL .... £2 each

EW20 Edgewise Meter 2¼ x ¾ inch rectangular. Clear Plastic Case, 2 inch deep.
EW20 1 mA. 42/6

EW16 Edgewise Panel Meter 1 x 3¼ inch face, 3½-inch deep.
EW16 500 uA. £3/17/6
EW16 1 mA. £3/7/6
EW16 300 volt A.C. £3/17/6

MR65 3¼-inch square face, 2½-inch round hole. Black Plastic Case.
MR65 500 uA. 52/6
MR65 1 mA., 5 mA., 10 mA., 25 mA., 50 mA., 100 mA., 250 mA., 500 mA. ALL .... 50/- each
MR65 50 volt A.C. 47/6
MR65 VU Meter £4/2/6

MO65 3¼-inch round, 2½-inch round hole, 1½-inch deep. Black Plastic.
MO65 100 uA. 55/-
MO65 500 uA. 37/6
MO65 1 mA., 5 mA., 10 mA., 20 mA., 50 mA., 100 mA., 150 mA., 250 mA., 500 mA. ALL .... 35/- each
MO65 50 Millivolt 37/6
MO65 100 Millivolt 37/6
MO65 15 volt D.C. 35/-
MO65 30 volt D.C. 35/-
MO65 300 volt D.C. 42/6
MO65 300 volt A.C. 42/6
MO65 1 amp. D.C. 35/-
MO65 30-0-30 D.C. amp. 42/6

"VU" METERS

Scale: —20—0 plus 3 VU.
0—100% (OVU) at 600 ohm.
Frequency Range: 30—7500 C/S.
Impedance: eq. 3900 plus/minus 200 ohms.
Time Constant: eq. 0.3 sec.
(Time for 99% response.)
MR2P VU Meter 45/-
MR3P VU Meter £3/17/6
MR65 VU Meter £4/2/6
MR4P VU Meter £5/5/-
MR4P 1-inch x 4½-inch square, 2¾-inch round hole. Clear Plastic Case.
MR4P 1 mA. £3/5/-
MR4P VU Meter £5/5/-

TRANSISTOR RECEIVER KITS

Kits of parts for the Audio and B.f.o. Sections of the 80 Mx Transistor Receiver described in August "A.R." are now available. Audio Kit $15.50, B.f.o. Kit $15.50. Kits will be available for subsequent sections as they are published.

RECORDING TAPES

Well known makes. Brand new in cartons. Guaranteed.

150 ft. on 3 inch reel,	Acetate	60c
225 ft. ,, 3 ,, ,,	,,	75c
300 ft. ,, 3 ,, ,,	Tensilised Mylar	$1.25
500 ft. ,, 3 ,, ,,	,, ,,	$1.65
600 ft. ,, 3¼ ,, ,,	,, ,,	$1.80
600 ft. ,, 5 ,, ,,	Acetate	$1.75
900 ft. ,, 5 ,, ,,	,,	$1.95
900 ft. ,, 5 ,, ,,	Mylar	$2.25
1200 ft. ,, 5 ,, ,,	,,	$3.50
1800 ft. ,, 5 ,, ,,	Tensilised Mylar	$5.25
850 ft. ,, 5¾ ,, ,,	Acetate	$1.75
1200 ft. ,, 5¾ ,, ,,	Mylar	$3.50
1800 ft. ,, 5¾ ,, ,,	Tensilised Mylar	$5.25
2400 ft. ,, 5¾ ,, ,,	,, ,,	$7.00
1200 ft. ,, 7 ,, ,,	Acetate	$2.75
1200 ft. ,, 7 ,, ,,	Mylar	$3.25
1800 ft. ,, 7 ,, ,,	Acetate	$3.75
1800 ft. ,, 7 ,, ,,	Mylar	$4.50
2400 ft. ,, 7 ,, ,,	,,	$5.25
3000 ft. ,, 7 ,, ,,	Tensilised Mylar	$7.50
3600 ft. ,, 7 ,, ,,	,, ,,	$9.25

Empty Tape Reels

3 inch	25c
3¼ ,,	35c
4 ,,	35c
5 ,,	40c
5¾ ,,	55c
7 ,,	50c

Plastic Storage Case and Empty Reel

5 inch	80c
7 ,,	$1.20

Leader Tape, White
100 ft. reel $1.25

BALUN TOROID

Type 355C. Impedance ratio 2.1 : 1, 52 ohms unbalanced to 25 ohms unbalanced. 3 to 30 Mc. For use at the base of a mobile whip antenna, coupled to fixed or adjustable tx output impedance. Lug terminals. $3.50.

MULTIMETER Model 200H

20,000 ohms per v. d.c. 10,000 ohms per v. a.c.

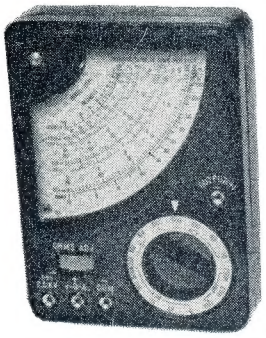

Specifications:
D.c. volts: 0-5, 25, 50, 250, 500, 2,500.
A.c. volts: 0-10, 50, 100, 500, 1,000.
D.c. current: 0-50 μA.; 25, 250 mA.
Resistance: 0-60K ohms; 0-6 meg.
Capacity: 0.01-0.3 μF. (at a.c. 5v.); 0.0001 - 0.01 μF. (at a.c. 250v.).
Decibel: minus 20 db. plus 22 db.
Output range 0-10, 50, 100, 500, and 1,000.
Battery used: UM3 1.5v. 1 piece.
Dimensions: 3¼ x 4½ x 1-1/8 in.

Complete with internal battery, testing leads and prods.
Price £5/12/6 inc. tax.
Packing and Postage 3/6

ALIGNMENT TOOLS

Jabel No. 4 Alignment Tool Kits. All popular sizes. Four tools in plastic pouch. 12/-, $1.20.

LSG11 SIGNAL GENERATOR

120 Kc.-390 Mc.

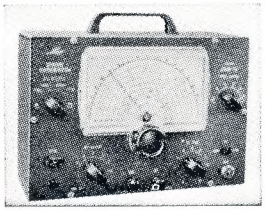

Freq. range (six bands): 120 Kc. to 130 Mc. on fundamentals; 120 to 390 Mc. on harmonics. Mod. freq. 400 and 1,000 c.p.s. Tubes: 12BH7, 6AR5. Rectifier: half wave selenium. Provision for crystal oscillator (xtal not supplied), 1 to 15 Mc. 100, 117 or 230v. a.c. input, 50/60 c.p.s. Size: 7½ x 10¾ x 4½ in. Weight: 6 lb.

Price: LSG11, £15/5/0 inc. tax
LSG10, £13/17/6 inc. tax
Packing and Postage 7/6

DRIVER AND OUTPUT TRANSFORMERS

Transistor type RL8, Driver Transformer, 3000 to 1330 c.t. Transistor type JK8 Output Transformer, 300 c.t. to 15. Physical size: height 1⅜ in., depth 1⅝ in., width 1⅝ in. 10/- ($1) each, or 17/6 ($1.75) per pair.

FILAMENT TRANSFORMERS

T4/4	230v., 6.3v. 2 a.	32/6	$3.25
2150	240v., 6.3v. 2.5 a., or two by 6.3v. 1.25a.	35/-	$3.50
2155	240v., 6.3v. 7.5v., 8.5v., 9.5v., 12.5v., 15v. 1 amp.	46/-	$4.60
12/64	240v., 6v. 4a., 12v. 4a.	50/-	$5.00
12/66	240v., 6v. 6a., 12v. 6a.	57/6	$5.75

TRIMAX INPUT TRANSFORMERS

Type TA 702S Serial D1. Max. level plus 3 db. Unbal. DC1-4 40 mA. **Price $3.**

Posts	Bridge	C.T.	Imped. Ohm
1 4	2 3	2	300
1 2	1 3 2 4		75
5 8		6	120K

HAM RADIO SUPPLIERS

5A MELVILLE ST., HAWTHORN, VIC. Phone 86-6465

North Balwyn tram passes corner. **Money Orders and Postal Notes payable North Hawthorn P.O.**

We sell and recommend Leader Test Equipment, Pioneer Stereo Equipment and Speakers, Hitachi Radio Valves and Transistor Radios, Kew Brand Meters, A. & R. Transformers and Transistor Power Supplies, Ducon Condensers, Welwyn Resistors, etc.

"AMATEUR RADIO"

JOURNAL OF THE WIRELESS INSTITUTE OF AUSTRALIA. FOUNDED 1910

SEPTEMBER 1966
Vol. 34, No. 9

Editor:
K. E. Pincott VK3AFJ

Assistant Editor:
K. M. COCKING VK3ZFQ

Publications Committee:
G. W. Baty (Secretary) VK3AOM
A. W. Chandler (Circulation) VK3LC
E. C. Manifold VK3EM
W. E. J. Roper VK3ARZ

Draughtsmen:—
Ken Gillespie VK3GK
Clem Allen VK3ZIV
Ian Smith .... 36 Green St., Noble Park

Advertising Enquiries:
C/o. P.O. Box 36, East Melbourne, C.2, Vic.
or
Mrs. BELLAIRS, Phone 41-3535. 478 Victoria Parade, East Melbourne, C.2, Victoria. Hours 10 a.m. to 3 p.m. only.

Publishers:
VICTORIAN DIVISION W.I.A.,
Reg. Office: 65a Franklin St., Melbourne, Vic.

Printers:
"RICHMOND CHRONICLE," Phone 42-2419. Shakespeare St., Richmond, E.1, Vic.

★

All matters pertaining to "A.R.," other than subscriptions, should be addressed to:

THE EDITOR,
"AMATEUR RADIO,"
P.O. BOX 36,
EAST MELBOURNE, C.2, VIC.

Acknowledgments will be sent following the Committee meeting on the second Monday of each month. All Sub-Editors should forward their articles to reach "A.R." **before the 5th of each month.** Any item received after the Committee meeting will be held over until the next month. Publication of any item is dependent upon space availability, but in general about two months may elapse before a technical article is published after consideration by the Publications Committee.

★

Members of the W.I.A. should refer all enquiries regarding delivery of "A.R." direct to their Divisional Secretary and not to "A.R." direct. Non-members of the W.I.A. should write to the Victorian Division, C/o. P.O. Box 36, East Melbourne. Two months' notice is required before a change of mailing address can be effected. Readers should note that any change in the address of their transmitting station must, by P.M.G. regulation, be notified to the P.M.G. in the State of residence, in addition "A.R." should also be notified. A convenient form is provided in the "Call Book."

★

Direct subscription rate is $3.00 a year, post paid, in advance. Issued monthly on the first of the month, January edition excepted.

FEDERAL COMMENT

★

A.O.L.C.P. AND C.W.

At almost all recent Federal Conventions, Council has had to consider, in one form or another, the relationship of the A.O.L.C.P. holder to his request for the use and non-use of c.w. The last Convention was no exception and Council considered, and rejected, three agenda items—all variations on the same theme. Basically, this was to allow A.O.L.C.P. Licensees use of all types of emission or, as a variation, the extension of operating privileges to include the 28 Mc. band. With reference to the first point, you cannot use c.w. until you have been examined and passed in it. On the second point, and at the risk of provoking some all too infrequent correspondence, it must be pointed out that whilst the Institute may appear to be unsympathetic to these appeals, International Radio Regulations preclude the abolition of the c.w. requirement below a nominated frequency.

The full text of the appropriate regulation RR41-04 of 1959 reads: "Any person operating the apparatus of an Amateur station shall have proved that he is able to send correctly by hand and to receive correctly by ear, texts in morse code signals. Administrations concerned may, however, waive this requirement in the case of stations making use exclusively of frequencies above 144 Mc." Institute representations to the Postmaster-General's Department resulted in this frequency amended to 52 Mc. You may well ask how—if there is an International regulation on the matter—can the local administration make a contrary decision? This comes about because the I.T.U. has provisions for administrations to make decisions where the results will not affect other International users. The radio isolation of Australia, in so far as 52 Mc. is concerned, was the only reason for having this frequency approved.

It should now be clear why limited licensees have no chance of getting operating privileges on the 28 Mc. band because, when in season, it is capable of providing world-wide communications.

It is interesting to note that W.I.A. proposals in 1959 advocated the reduction of the then current frequency of 1000 Mc. to 30 Mc. A compromise was reached on 144 Mc. after both the U.K. and the U.S.A. had been only in favour of reduction to 250 Mc. It would be interesting to speculate on the A.O.L.C.P. population and the present state of the u.h.f. art if the frequency had been made 250 Mc., or even remained at 1000 Mc. and the local administration had refused to agree to a reduction.

This then, is the present situation, and whilst there are staunch supporters on both sides of the "to be or not to be" c.w. theory, the simple fact of life is that until the next I.T.U. Conference the International requirement for c.w. must stand. Whilst it is generally agreed that c.w. is a declining force in the field of communications, and could, conceivably be removed from the list of pre-requisites in the future, it still has its uses.

It is irksome and somewhat paradoxical to A.O.L.C.P. licensees to realise that whilst we are experimenting in the relatively unexplored field of space communications, and on frequencies available to the limited licensees, the only presently successful and reliable mode of communication, whether by Moonbounce or repeater satellite, is—c.w.!!

Therefore, you Z Calls, don't feel too badly about missing out on DX on 432 Mc.—after all, you can always sit for the C.W.!!

—PETER D. WILLIAMS, VK3IZ, Federal Secretary, W.I.A.

CONTENTS

A Transistorised Amateur Band Receiver, Part Two 2
Transistorised S.s.b. Generator .. 3
Transistor Amplifier Design, Part One 5
Further Notes on VK4AT's Power Supplies 7
Sideband 9
The 80 and 40 Metre "Transistor Special" 10
Hints and Kinks: Filed Information 11
An F.E.T. Preamp. for 144 Mc. .. 13
Sunspots and Predictions 14
Prediction Charts for Sept. 1966 15
Book Review: Mullard Voltage Regulator (Zener) Diodes 15
New Call Signs 15
Technical Correspondence: Diodes in Power Supplies 17
SWL 18
YRC 18
DX 19
Correspondence 19
Publications Committee Reports .. 21
VHF 21
Federal and Divisional Monthly News Reports 22

A Transistorised Amateur Band Receiver

PART TWO

HAROLD L. HEPBURN,* VK3AFQ

BEFORE describing the third stage of the Moorabbin Club receiver, readers may be interested in some of the results obtained when the first 36 audio stages were tested at a project meeting held for that purpose.

A 1,000 cycle sine wave generator (transistorised of course!) was used as a signal source and fed to each unit through the 10K potentiometer provided. The 15 ohm speakers issued with each kit were used as the load. An oscilloscope and v.t.v.m. were connected across the load. Power was obtained from a regulated d.c. supply set at 12 volts. All test leads were terminated in crocodile clips to facilitate quick connection and release of each unit as it was tested.

The c.r.o. was set to give a 10 volt peak to peak pattern between fixed points on the tube graticule. The unit under test was connected and the 10K potentiometer adjusted so that the output waveform was just short of the flat-topping point. The peak to peak deflection on the c.r.o. was measured and from this, and the initial calibration, the output was calculated.

Whilst the method used might offend the purist, it was simple and gave comparable results. The standing current of each unit was also measured under no-signal conditions.

The mean output of the units tested was 220 mW., with a maximum of 240 mW. and a minimum of 210 mW.

The mean quiescent current drawn was 9.1 mA. with a maximum of 10 mA. and a minimum of 7.5 mA.

Readers may note a discrepancy between the figures now quoted and those published last month. In the August issue the standing current was shown as 3 mA., but should have read 6 mA. The error was due entirely to a most ambiguous entry in the handwritten manuscript submitted by the writer. Even so, the 6 mA. which should have been quoted, was still below the average found.

Further measurements on the prototype showed that the 100 ohm biasing resistor in the base circuit of the output transistors was nearer 80 ohms than the 100 ohms 5% indicated by its colour coding. (There must be a moral in this somewhere). With less bias than intended the quiescent current would be less than that measured with the correct value of biasing resistor in circuit.

Apart from this point, it was pleasing to note that the transition from prototype to the "production run" had gone well. Only two errors in assembly were found—both being the reversal of leads to a transistor.

CHANGES TO B.F.O. UNIT

As a result of further development, two changes have been made to the b.f.o. unit described last month.

Firstly, the 2.5 mH. choke in the collector of the AF115N buffer amplifier has been replaced with a 2,700 ohm half watt resistor. It was found that, with the choke, the r.f. output was in excess of the amount required.

Secondly, the 90 pF. Eddystone "b.f.o. note" condenser and its associated 100 pF. silver mica series padder have been replaced with a Polar JBC-804-50 50 pF. variable. The Polar component is smaller and the cost below that of the Eddystone plus a padder.

It is hoped that the test results on the 40 odd b.f.o. units now under construction will be available for publication next month.

STAGE III.—THE I.F. STRIP

The i.f. strip consists of two stages of amplification at 455 kc., a product detector which doubles as an a.m. detector in the absence of b.f.o. injection, and an a.g.c. rectifier/amplifier. The complete unit is built on a printed circuit board 2½" x 6".

The basic design for the i.f. strip was taken from a circuit appearing in the Editors and Engineers' Transistor Handbook, but several changes have been made. Minor alterations have been made to the biasing circuits to allow use of different transistors, while selectivity has been improved by including additional tuned circuits. The circuit diagram of the finished unit is given in Fig. 4.

Signal input to the unit is from a low impedance link on a transformer in the collector circuit of the mixer.

Each of the two coupling transformers between the two AF115N amplifier stages consists of 80 turns of 36 B. & S. enamelled wire on a Ducon Q1 miniature pot core. The collector tap is 20 turns from the cold end of

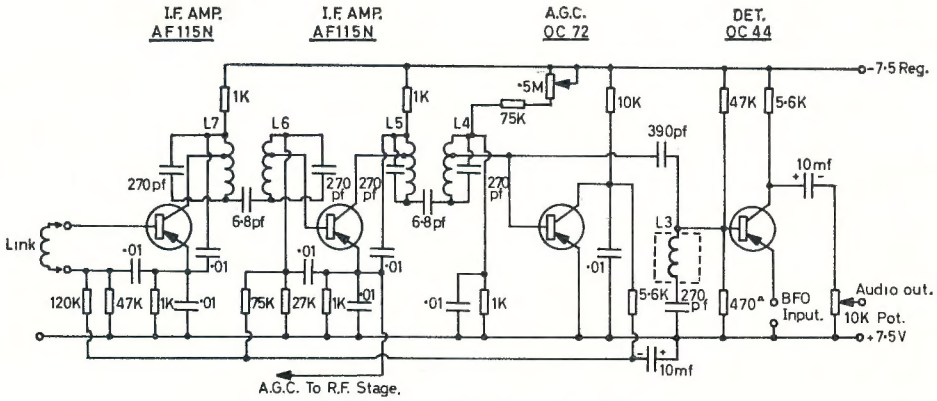

VK3APC. RECEIVER. I.F. STRIP

Fig. 4.

Kits Available for Transistorised Receiver

As a result of the article appearing in the August 1966 issue of "A.R." on the Moorabbin Club project, several enquiries—both Victorian and Interstate—have been received.

Since these enquiries have indicated a high level of interest in making a receiver of the type described, the Moorabbin Club has undertaken to provide complete kits—including printed circuit board, all instructional material and circuit diagrams—to those wishing to participate.

At this time kits for the first three stages—audio, b.f.o. and i.f. strip—are available. The local oscillator kit will be available in late September and the front-end kit a week or so afterwards.

The cost of the audio stage is $15.50, less $2.50 if a speaker is not required. The b.f.o. kit, which includes the metal cabinet for housing the complete receiver, is $15.50, less $1.75 if the metal case is not required. The kit for the i.f. strip is $15. The cost of the local oscillator and front-end kits is not yet firm, but will be in the region of $16.00.

Those wishing to make the receiver should send a cheque or money order for the stages required to—

The Assistant Hon. Secretary, Moorabbin & District Radio Club, 4 Elizabeth St., East Brighton, Victoria.

Remittances should be made payable to "The Moorabbin and District Radio Club."

* 4 Elizabeth St., East Brighton, Vic.

the winding and the base tap is 8 turns from the cold end. No neutralisation (or unilateralisation) is required. The coil taps have been deliberately chosen to present some mismatch and this, together with the use of drift transistors having a low feed back capacity, ensures stability. This method of taming the circuit was chosen in preference to the "squeeze 'er to the limit in one stage and then use some C to tame 'er" technique which caused trouble in one of the early prototypes.

Output from the second top coupled pair of transformers (which are identical to the first pair) is used for two purposes. One line goes direct from the base tap to the a.g.c. circuit, while a second line goes via the 390 pF. capacitor to the base of the detector.

The OC72 a.g.c. stage is biased near to cut off and draws little current. The voltage drop across the 10K collector resistor is thus small and the collector voltage is highly negative under no-signal conditions. Since the collector is connected to the a.g.c. line via the 5.6K resistor, the a.g.c. line is also highly negative and the two i.f. amplifiers are biased to the condition of highest gain. If a signal is fed to the base of the OC72, it is rectified by the base-emitter diode junction and a voltage drop is developed across the 1,000 ohm base load resistor. Since this voltage is negative, collector current flows, the collector (and thus the a.g.c. line) becomes more positive and a positive-going bias is applied to the i.f. amplifiers, thus reducing their gain.

Amplified a.g.c. for the r.f. stage is taken from the emitter of the second AF115N. This emitter is negative with respect to ground due to the voltage drop across the 1,000 ohm emitter resistor. Application of an a.g.c. voltage to the base reduces the current flowing through the stage. This in turn reduces the drop across the emitter resistor and provides, in effect, amplified a.g.c. action.

The half meg. volume control in the biasing circuit of the a.g.c. amplifier acts as an r.f. gain control. Since it varies the bias to the a.g.c. amplifier, it also effects the voltage appearing on the a.g.c. line. As the amount of resistance in circuit is decreased the a.g.c. line goes more positive and the gain of the r.f. stage and the two i.f. amplifiers is reduced.

The 10 μF. electrolytic between the a.g.c. line and ground was chosen to give a "hang" characteristic on s.s.b. and c.w. signals. It prevents level changes during normal speech periods but allows the receiver to attain maximum sensitivity during small pauses between sentences.

The OC44 detector is normally biased very close to cut off in the absence of any b.f.o. injection. A.m. signals are rectified in the base-emitter diode and passed on for audio amplification.

With b.f.o. voltage applied, the stage acts as a mixer. Injection voltage is adjusted to its correct value as follows. A strong a.m. signal is fed into the unit until in zero beat with the b.f.o. The b.f.o. oscillator coil slug is then detuned until the heterodyne can no longer be heard. This will be anything from 10-20 kc., depending on how good your ears are! Output from the receiver should drop considerably. The b.f.o. amplifier coil slug is then adjusted until any residual signal nulls out. The b.f.o. oscillator coil slug is then returned to zero beat with the signal.

On test, the minimum signal that could be detected on a.m. was 50 μV. into the i.f. strip. On c.w. the level approximated to 30 μV.

The series trap L3 in the base circuit of the OC44 detector consists of 11 turns of 29 B. & S. enamelled wire on a Ducon Q2 miniature pot core. It was included to minimise a spot caused by the 8th harmonic of the b.f.o. on 3640 kc.

At the time of writing an S meter circuit has been prototyped and—together with a 2 metre converter, a 20 metre converter and a regulated a.c. power supply—will be described later in this series of articles. ●

A.O.C.P. CLASS ASSISTANT INSTRUCTOR

WANTED: An Assistant Instructor for A.O.C.P. Theory Class. One night weekly. Remuneration by arrangement. Apply in writing by the 7th September to the Secretary, W.I.A. Victorian Division, P.O. Box 36, East Melb'ne.

TRANSISTORISED S.S.B. GENERATOR

Incorporating 2.1 Kc. Mechanical Filter

The s.s.b. generator is based on a Collins mechanical filter and transistor circuitry. It operates from 12 v. and consumes approximately 9 mA. Two 6 v. lantern batteries are quite suitable as a power supply. The unit is constructed on matrix board and is mounted in a standard aluminium chassis 8 in. x 5 in., which are obtainable from most radio shops. The carrier crystal oscillator is an OC44 with a tuned collector circuit. The balanced modulator is a pair of diodes matched for their forward resistance and critical carrier suppression is achieved by means of the 1K pot. and a 3 to 30 pF. trimmer. The i.f. amplifier follows normal transistor circuitry as used with the mechanical filter.

The audio amplifier consists of a low noise transistor followed by a standard audio transistor and a small interstage transistor transformer to couple the a.f. via a 2.2K isolating resistor to the balanced modulator. The microphone input is essentially low impedance.

The output of the 455 Kc. amplifier at points "A" is fed to a balanced mixer consisting of a pair of OC171 transistors. The mixed oscillator is crystal controlled with a tuned collector circuit of an OC44. A 5-turn link couples energy to the emitters of the balanced mixer and a 500 ohm tab-pot. effectively nulls the mixer crystal oscillator signal in the output circuit which is peaked to 5.2 Mc.

The 5.2 Mc. ouput can be link-coupled to the grid circuit of a normal valve mixer using a v.f.o. to convert to the required Amateur frequencies, as indicated on the diagram. The v.f.o. is also transistorised and is a copy of the "synthetic rock" as previously described in "A.R."

Each section of the s.s.b. generator is effectively de-coupled and no difficulty was encountered in making the unit operate.

—V. J. Kitney, VK6VK.

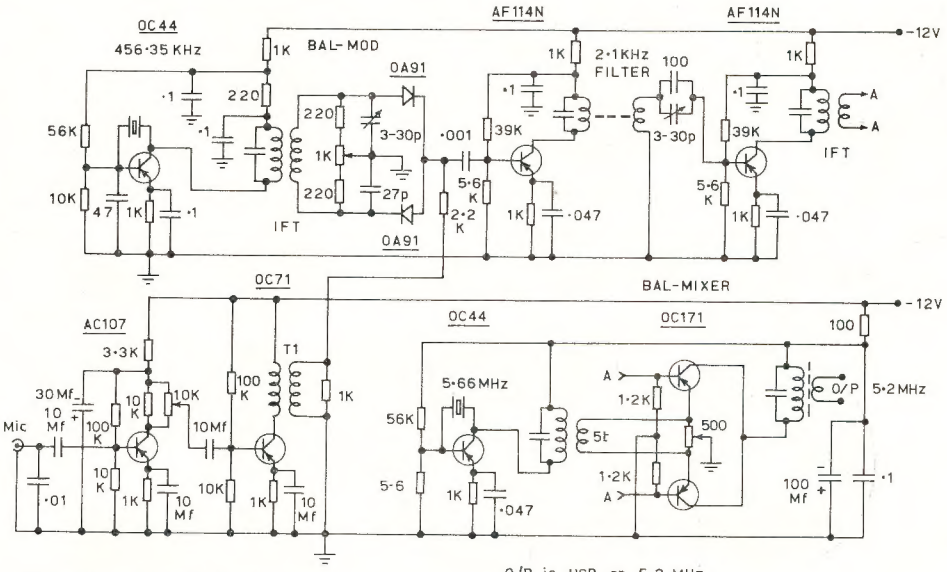

AIR-WOUND INDUCTANCES

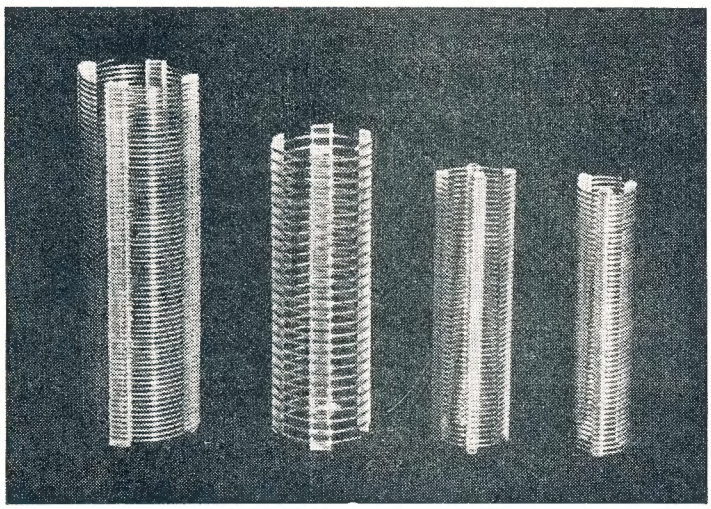

No.	Diam.	Turns per Inch	Length	B. & W. Equiv.	Price
1-08	½″	8	3″	No. 3002	59c
1-16	½″	16	3″	No. 3003	59c
2-08	⅝″	8	3″	No. 3006	70c
2-16	⅝″	16	3″	No. 3007	70c
3-08	¾″	8	3″	No. 3010	82c
3-16	¾″	16	3″	No. 3011	82c
4-08	1″	8	3″	No. 3014	95c
4-16	1″	16	3″	No. 3015	95c
5-08	1¼″	8	4″	No. 3018	$1.28
5-16	1¼″	16	4″	No. 3019	$1.28
8-10	2″	10	4″	No. 3907	$1.55

SPECIAL ANTENNA ALL-BAND TUNER INDUCTANCE

(equivalent to B. & W. No. 3907-7″)
7″ length, 2″ diameter, 10 turns per inch, **$2.76**

References: A.R.R.L. Handbook, 1961; "QST," March 1959; "Amateur Radio," December 1959.

Take the hard work out of Coil Winding—use "WILLIS" AIR-WOUND INDUCTANCES

WILLIAM WILLIS & CO. PTY. LTD.

430 Elizabeth St., Melbourne, C.1, Vic. Phone 34-6539

LOG BOOK

IS NOW AVAILABLE

Larger, spiral-bound pages with more writing space.

Price 7′6 each
including Postage

Obtainable from your Divisional Secretary, or W.I.A., P.O. Box 36, East Melbourne, C.2, Victoria.

LOW DRIFT CRYSTALS

FOR

AMATEUR BANDS

ACCURACY 0.01% OF STATED FREQUENCY

3.5 and 7 Mc.
Unmounted, £2/10/0
Mounted, £3/0/0

12.5 and 14 Mc.
Fundamental Crystals, "Low Drift"
Mounted only, £5.

THESE PRICES DO NOT INCLUDE SALES TAX

Spot Frequency Crystals Prices on Application.

Regrinds **£1/10/0**

MAXWELL HOWDEN

15 CLAREMONT CRES., CANTERBURY, E.7, VICTORIA

CHOOSE THE BEST—IT COSTS NO MORE

RESIN CORE SOLDERS
for reliable connections

O. T. LEMPRIERE & CO. LIMITED. Head Office: 27-41 Bowden Street, Alexandria, N.S.W.
and at Melbourne • Brisbane • Adelaide • Perth

TRANSISTOR AMPLIFIER DESIGN

PART ONE

R. L. HARRISON, VK3ZRY*

THIS article was written so that most Amateurs or other interested persons could design a transistor amplifier for low level and power r.f. and a.f. applications. Some small knowledge about transistors and simple mathematics is assumed, but the maths. is kept simple, all terms are explained and graphs are used where complicated formulae are encountered. These formulae are given though, because the graphs can only be used under certain specified circumstances as mentioned in the text.

LOW LEVEL AUDIO AMPLIFIERS

I will limit my description to a common emitter amplifier as this one finds the widest application. Fig. 1 is the circuit to which I will make constant reference.

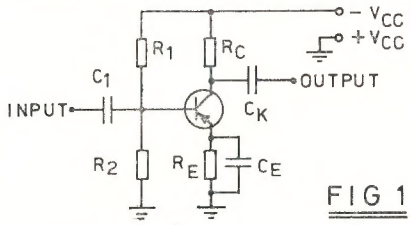

FIG 1

A PNP transistor is shown; only two things will change if an NPN transistor is used. The supply voltage V_{CC} will be reversed and the direction of the emitter arrow will be reversed. Everything else is the same (except perhaps the direction of current flow).

The first things to establish are the d.c. operating conditions. Fig. 2 will give you all the voltages and currents to be used and an explanation of the meanings of the ones that are not self-explanatory.

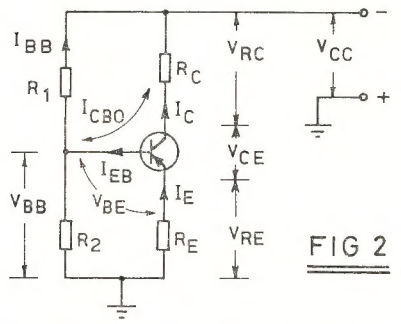

FIG 2

V_{BE} = Base to emitter voltage.
V_{CC} = Supply voltage.
V_{RC} = Voltage across collector resistor.
V_{CE} = Voltage from collector to emitter.
V_{RE} = Voltage across emitter resistor R_E.
V_{BB} = Base bias voltage.
I_{BB} = Bias components bleed current.
I_C = Collector current.
I_E = Emitter current.
I_{EB} = Emitter to base current.
I_{CBO} = Collector to emitter leakage current.

* 1 Mary Street, North Balwyn, E.9, Vic.

I think some explanation of V_{BE}, I_{EB}, I_{CBO}, R_E, R1 and R2 is necessary.

The base —emitter voltage V_{BE} is determined by I_{EB} and the internal d.c. resistance, from base to emitter, of the transistor. I_{EB} is determined mainly by bias and is generally about 100 microamps. in practical circuits. The internal resistance of the transistor is about 1K to 10K ohms from base to emitter and this gives around 0.1 volt for V_{BE}. This is variable in practice, owing to changes in I_{EB} and V_{BB} and transistors, but V_{BE} is generally between 0.1 and 0.2 volt for germanium transistors. For silicon transistors V_{BE} is about 0.6 to 0.7 volt.

It will be found in practical applications that I_{EB} is around 100 to 500 μA. Now I_{EB} flows through R2, R_E and the base-emitter junction. From the circuit it can be seen that I_E also flows through R_E and thus I_{EB} will be a part of I_E. In a practical circuit I_E is generally between 1 mA. and 5 mA. I_{EB} is a great deal smaller than I_E and will not generally be a significant part of I_E. Thus we can assume for design purposes that I_E approximately equals I_C or:—

I_E approx. equals I_C.

I_{CBO} is the collector-base leakage current, and is due mainly to minority charge carriers moving from base to collector. For germanium transistors I_{CBO} doubles its value for every 8°C. rise in temperature. Since for germanium transistors I_{CBO} is typically around 10 μA. at 25°C. (about room temperature), and will reach 0.32 mA. at 65°C., it will considerably affect I_{EB} with only a small temperature change, thus shifting the operating point. We have to design the amplifier to prevent this effect from affecting the operation of the amplifier. R1 and R2 are designed to minimise changes in I_{CBO} and correct these changes.

The resistor R_E is used to stabilise against forward conduction from emitter to base to ensure that I_E is relatively independent of changes in temperature. This is done to counteract the 2 mV. per °C. decrease in V_{BE} for a temperature rise.

Now that preliminary explanations and general guff are over and done with, we will get on with the design procedure (fully explained) and an example later.

(1) Choose V_{CC}. This depends on what battery or supply is convenient for you to use.

(2) Choose I_C. This is typically between 1 mA. and 5 mA. for most low level applications. If you want economy, go for 1 mA. But with silicon transistors operation is best between 2 mA. and 5 mA.

(3) Choose V_{CE}. This should be one-third or less of V_{CC}. See that V_{CC} is high enough to allow a reasonable voltage across the transistor (V_{CE}) otherwise distortion and low gain may result. Check that $V_{CE} \times I_C$ is less than P_C max. P_C max. is typically about 0.2 watt. If $V_{CE} \times I$ is greater than P_C max., then lower V_{CE} to an appropriate value.

(4) Calculate R_C. The formula is as follows, if V_{CE} = one-third V_{CC}:—

$$R_C = \frac{V_{CE}}{I_C}$$

This does not take into account V_{RE} which will reduce V_{CE} somewhat, but V_{CE} will decrease only a small amount (providing R_E is not too large) and this will not generally upset things.

Another way out if you know the input resistance of the following stage is to make R_C = 5 to 10 times R_{in} for germanium transistors and 2 to 8 times R_{in} for silicon transistors. This is because R_C is also the a.c. load (or part thereof) of the amplifier.

You can decrease R_C about half to one-third to increase the input resistance but make sure $V_{CE} \times I_C$ does not rise above P_C max.

(5) Calculate R_E by this formula:—

$$R_E = \frac{V_{CC} - (V_{RC} + V_{CE})}{I_C}$$

where $V_{RC} = I_C R_C$

Add the drop across R_C to V_{CE}, subtract this from V_{CC} and then divide by collector current. You can divide by collector current because, as explained earlier, I_C approx. equals I_E.

(6) Determine base bias resistors R1 and R2. First find $V_{RE} = I_C \times R_E$, now add V_{BE}. This will give you V_{BB}.

i.e. $V_{BB} = V_{RE} + V_{BE}$

V_{BE} for normal operation of germanium transistors is 0.1 volt and for silicon transistors is about 0.7 volt. You have already found R_E, you know I_E (approx. equals I_C), so, by ohms law,

$$V_{RE} = I_C R_E$$

therefore $V_{BB} = I_C R_E + V_{BE}$.

Now determine a bleed current. Your choice will depend on economy of current (if you want it) and temperature stability. For silicon transistors I_{CBO} is extremely small until quite high temperatures are reached and the resistors R1 and R2 are used mainly to determine correct bias. For germanium transistors a bleed current about 20 times I_{CBO} at normal temperatures is used so that the bias will not change significantly if I_{CBO} does. For germanium transistors I_{CBO} is around 10 μA. at normally encountered temperatures, so a bleed current of 200 μA. up to 500 μA. is good practice.

Right, having chosen I_{BB} you can determine R2.

$$R2 = \frac{V_{BB}}{I_{BB}}$$

$$\text{Now } R1 = \frac{V_{CC} - V_{BB}}{I_{BB}}$$

Having calculated R1 and R2, check that the ratio $R_B \div R_E$ is less than nine (9), where $R_B = (R1 \times R2) \div (R1 + R2)$.

There! You have six steps, each are explained and your d.c. conditions for the amplifier should be OK.

The next thing to do is to get the thing to amplify audio signals.

Have a look at Fig. 1. There are three capacitors marked C1 (input capacitor), C_E (emitter resistor bypass) and C_K (coupling capacitor to next stage). Their values will depend on the frequency response you want.

(1) Choose the lowest frequency of interest to you. For most of you this is probably 300 cycles. Don't worry about the high frequencies yet—unless you want hi-fi. The upper frequency is determined by the transistor. If you want to cut off at 3 kc. or 5 kc. then you put capacitors across R2. More about that later.

(2) Having established your lowest frequency of interest, you give it a fancy name ——— (censored!!). Call it the low frequency cutoff and give it the symbol f_1. The output at this frequency is supposed to be 3 db. down on the mid-range frequency (half of it).

If you feel mathematically energetic you can calculate C_E and C_K from the following formulae. If you don't feel so inclined then use the graphs supplied for the amplifier basic general design in Fig. 3.

$$C_K = \frac{1 \times 10^6}{2\pi f_1 \left(R_C + \frac{R_B R_{in}}{R_B + R_{in}}\right)} \quad .. (1)$$

$$\text{and } C_E = \frac{(\beta_0 + 1) \times 10^6}{2\pi f_1 \left(R_{in} + \frac{R_B R_C}{R_B + R_C}\right)} \quad .. (2)$$

where C_K and C_E are in microfarads.

f_1 = desired 3 db. low frequency cutoff in cycles per sec.

R_C = collector load resistor.

R_{in} = the input resistance of the following transistor (R_{ie}) obtainable from the manufacturer's data but is generally in range of 300 to 1,000 ohms.

R_B = (R1 R2) ÷ (R1 + R2) or resistance of R1 and R2 in parallel of following stage.

β_0 = the low frequency, small signal current gain of the transistor (h_{fe}) obtainable from manufacturer's data. For germanium transistors it is typically 50 to 100 and for silicon transistors between 100 and 300.

π = 3.142.

From an examination of equation (1) it can be seen that C_K depends primarily on f_1 and R_C. From this information and by specifying values in a typical circuit for other components we can prepare a graph of R_C versus C_K.

Fig. 3 is a typical circuit to use and small variations in R1 and R2 will not appreciably affect the graphs.

Also, from examining equation (2) we can see that C_E depends almost entirely on β_0 (or h_{fe}) and R_C, as R_{in} is relatively small under most circumstances. Two graphs for C_E have to be plotted, one for germanium and one for silicon transistors. In the case of germanium transistors β_0 was taken as typically 50; for silicon transistors it was taken as being 150.

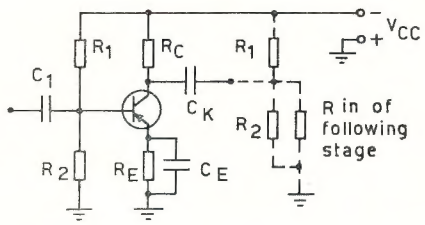

FIG 3

For this circuit:

f_1 = 300 c.p.s.

R_{in} = 300, 500, 1,000 ohms (marked on graphs).

R1 = 47K ohms.

R2 = 10K ohms. (R1 and R2 of following stage).

USE OF GRAPHS

(a) Look up vertical axis (R_C) and find value of R_C you have previously calculated.

(b) Draw a horizontal line across to the appropriate curve if you know R_{in} of the following stage. If you don't know R_{in} of following stage, use curve marked R_{in} = 500 ohms for germanium transistors, or curve marked R_{in} = 1,000 ohms for silicon transistors.

(c) Where the horizontal line touches the graph drop a vertical line down to the horizontal axis (C_K or C_E) and read off value of capacitor. Use the nearest value you can buy in your circuit, or parallel an electrolytic and some disc ceramics to make a close approximation.

VALUE OF C1

By now you will be wondering what to do about C1. If this is the input capacitor to the first stage (driven by microphone, or what have you), make C1 at least as large as C_K. If this capacitor (C1) is between two stages, i.e. you have just designed the second stage of an amplifier, then find C1 as you found C_K. Use the values of R_C and R_B for the stages in use.

The usual thing to do is to design one stage and connect a couple together and then calculate the values of C_K and C_E as well as C1.

EXAMPLES

You should now be thoroughly confused—like me. Here is a worked example to clarify (or confuse?) the methods outlined above. Circuit as for Fig. 3, neglect values shown underneath.

(i) V_{CC} = 9v. I've got a 9v. battery handy.

(ii) I'm going to use an OC71, so a collector current of 1 mA. will be all right.

(iii) I'll let V_{CE} = 3.0 volts,

$V_{CE} \times I_C = 3 \times 1 \times 10^{-3}$

= 3 mW.

which is well within P_C max. for an OC71.

(iv) $R_C = 3.0 \div (1 \times 10^{-3})$

= 3K ohms.

Nearest value is 3.3K ohms so I'll use that.

$$\text{(v) } R_E = \frac{V_{CC} - (I_C R_C + V_{CE})}{I_C}$$

$$= \frac{9 - (1 \times 10^{-3} \times 3.3 \times 10^3 + 3)}{1 \times 10^{-3}}$$

$$= \frac{9 - (3.3 + 3)}{1 \times 10^{-3}}$$

$$= \frac{9 - 6.3}{1 \times 10^{-3}}$$

= 2.7K ohms.

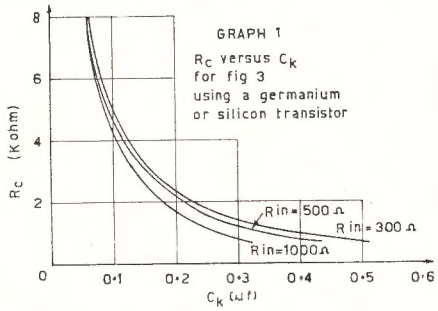

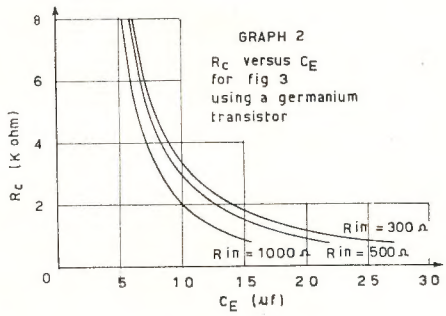

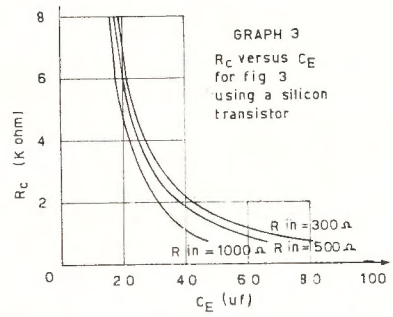

(vi) $V_{RE} = 1 \times 10^{-3} \times 2.7 \times 10^3$

= 2.7 volts.

$V_{BB} = 2.7 + 0.1$

= 2.8 volts.

(OC71 is a germanium transistor so that V_{BE} approx. equals 0.1 volt.)

I'll let I_{BB} = 500 μA. (0.5 mA.).

$$\text{Now R2} = \frac{V_{BB}}{I_{BB}}$$

$$= \frac{2.8}{0.5 \times 10^{-3}}$$

= 5.6K ohms.

$$\text{Now R1} = \frac{V_{CC} - V_{BB}}{I_{BB}}$$

$$= \frac{9 - 2.8}{0.5 \times 10^{-3}}$$

$$= 12.4\text{K ohms}$$

nearest value is 12K ohms.

Now to check the **stability factor.**

$$\frac{\dfrac{R1 \times R2}{R1 + R2}}{R_E}$$

$$= \frac{\dfrac{12 \times 5.6 \times 10^6}{(12 + 5.6) \times 10^3}}{2.7 \times 10^3}$$

$$= \frac{\dfrac{67 \times 10^3}{17.6}}{2.7 \times 10^3}$$

$$= \frac{3.8}{2.7}$$

$$= 1.4$$

Thus the stability is much less than nine, so the stability should be good.

FIG 4

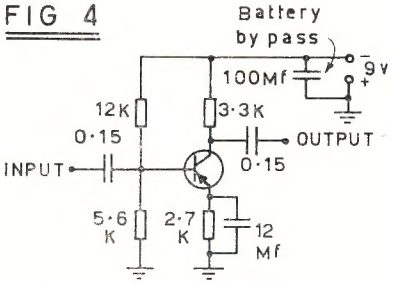

Now we have a few resistor values:

R_C = 3.3K ohms
R_E = 2.7K ohms
R1 = 12.0K ohms
R2 = 5.6K ohms

and a 9v. battery is being used. All we have to do is find C1, C_E and C_K.

(i) The lowest frequency of interest to me is 300 c.p.s.

(ii) Seeing as f_1 = 300 c.p.s. and I'm going to follow up this amplifier with another exactly the same, the input impedance of an OC71 will be close to 300 ohms, so I'll work out the value of C_E and C_K by using both the graphs and the formula.

From Graph 1, C_K = 0.15 μF.

By formula (1):—

$$C_K = \frac{1 \times 10^6}{2\pi f_1 \left(R_C + \dfrac{R_B R_{in}}{R_B + R_{in}}\right)}$$

$$\text{Now } R_B = \frac{12 \times 5.6 \times 10^3}{(12 + 5.6) \times 10^3}$$

$$= \frac{67 \times 10^3}{17.6}$$

$$= 3.8 \times 10^3$$

Also R_{in} = 300 ohms
R_C = 3.3K ohms
f_1 = 300 c.p.s.

$$\text{Now } C_K = \frac{1 \times 10^6}{2\pi \times 300 \left(3{,}300 + \dfrac{3{,}800 \times 300}{3{,}800 + 300}\right)}$$

$$= \frac{1 \times 10^6}{2\pi \times 300\ (3{,}300 + 278)}$$

$$= \frac{1 \times 10^6}{2\pi \times 300 \times 3{,}578}$$

$$= 0.149\ \mu\text{F}.$$

Use a coupling capacitor of 0.15 μF. as this value is easily obtainable. C1 will be the same value.

From Graph 2, C_E = 10 μF.

By formula (2):—

$$C_E = \frac{(\beta_o + 1)\ 10^6}{2\pi f_1 \left(R_{in} + \dfrac{R_B R_C}{R_B + R_C}\right)}$$

Now R_B = 3.8 × 10^3
R_{in} = 300 ohms
R_C = 3.3K ohms
f_1 = 300 c.p.s.
β_o = 50

$$C_E = \frac{(51) \times 10^6}{2\pi \times 300 \left(300 + \dfrac{3{,}800 \times 3{,}300}{3{,}800 + 3{,}300}\right)}$$

$$= \frac{51 \times 10^6}{600\pi\ (300 + 1{,}770)}$$

$$= \frac{51 \times 10^6}{600 \times \pi \times 2{,}070}$$

C_E = 12.8 μF.

The value of 12 μF. is closer because the graphs are only correct for R_B = 8 × 10^3. The discrepancy is only small in this case and a value of 10 μF. in the circuit would not upset things too much.

Fig. 4 shows the completed circuit.

Now, if you want to limit the high frequency response you can put a capacitor in parallel with R2 (base to earth) to shunt the highs.

(i) Pick a frequency at which you want the response to drop by half (3 db.), for most Amateurs this will be 3 kc. Call this frequency f_2.

(ii) Calculate the value of (R_B R_{in}) ÷ (R_B + R_{in}) and call it R_h.

(iii) Calculate the value of the shunt capacitance C_S (see Fig. 5) from this equation—

$$C_S \text{ (in } \mu\text{F.)} = \frac{1}{R_h} \times \frac{10^6}{2\pi f_2}$$

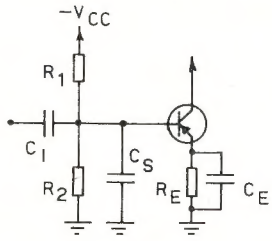

FIG 5

Example (from circuit in Fig. 4):—

f_2 = 3,000 c.p.s.
R_B = 3.8 × 10^3
R_{in} = 300 ohms

$$R_h = \frac{3{,}800 \times 300}{3{,}800 + 300}$$

$$= 278.$$

$$\text{Now } C_S = \frac{10^6}{278 \times 2\pi \times 3{,}000}$$

$$= \frac{10^6}{52.4 \times 10^5}$$

$$= \frac{10}{52.4}$$

$$= 0.191\ \mu\text{F}.$$

Use a value of 0.2 μF.

Well, that is the easy (?) way to design a low level audio amplifier without referring to equivalent circuits, hybrid parameters and a mass of manufacturer's data. I suppose it seems a bit long but once you've tried it, it becomes quite easy. A second article (Part Two) will give you an easy method of designing low level r.f. and i.f. amplifiers. A third article will deal with power r.f. and a.f. amplifiers.

REFERENCES

(a) "Transistors," by Milton S. Kiver.
(b) "Reference Manual of Transistor Circuits," by Mullard.
(c) "73" Magazine, January 1965.
(d) "Electronic Fundamentals and Applications," by John D. Ryder.

— • • • —

FURTHER NOTES ON VK4AT's POWER SUPPLIES

Quite recently I acquired a power supply with two different circuits attached, a 500-volt a side h.t. supply and a 75-volt a side bias supply.

This latter I wished to alter to an orthodox supply for my v.f.o.

Now under the original wiring scheme the common wires of each circuit were the common common wires. Therefore the correctly marked terminals were the common common common designated terminals. However, when changing one of the systems as above I quite naturally assumed that the common wires of the circuits were common common wires and I attached them accordingly.

Barrie VK4LN nearly had a fit at the sight of it. He explained that, under the changed system I had a common designated terminal that was now a centre tap and thus to be grounded. This didn't alter the fact that its wiring was still common, common only to that particular circuit. It was not common to the common common wires of the circuit as a whole. The wiring in the other circuit would now be common common wires only until it had ceased to be common to both common designated terminals.

This severance had become necessary now because of the potential difference between the two common systems.

He must have been right as the power supply now works as intended.

It appears that a common common is only feasible in a multiple circuit, with the common common common to each common circuit, and thus with no potential differences in any section of the common wiring.

As you could not differentiate in the term at any point, you must have a common common in each leg.

Under these circumstances would it be a common common or a common common to both circuits?

—A. J. C. Thompson, VK4AT, Skyring Creek, Pomona, Qld.

YM F-SERIES S.S.B. EQUIPMENT

PROFESSIONAL QUALITY AT AMATEUR PRICES

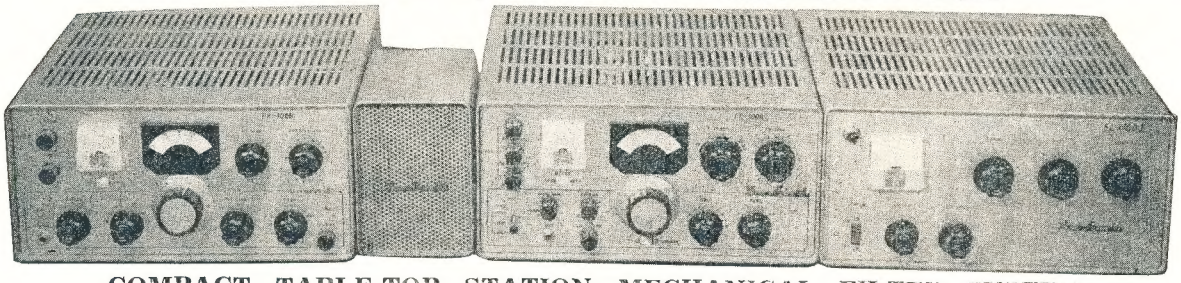

COMPACT TABLE-TOP STATION—MECHANICAL FILTER SYSTEM
FIVE BANDS — 80-10 METRES. TRANSCEIVE OR NORMAL OPERATION

FR-100B: RECEIVER, S.S.B.-A.M.-C.W., dual conversion, with crystal locked front end, two mechanical filters for best reception of s.s.b. and a.m., high reduction precision gear driven dial reads to 1 Kc. Crystal filter for c.w. A.n.l., "S" meter, a.g.c., s.s.b. clarifier, built-in monitor. Additional crystals for 100 Kc. calibrator, full 10 mx coverage, WWV and three s.w. ranges. A professional quality receiver for the Amateur or discriminating S.w.l. **£209½ ($419)** inc. S.T.

FL-200B: TRANSMITTER, S.S.B.-A.M.-C.W., Two 6JS6A (similar 6DQ5) tubes in p.a. Solidly constructed and neatly wired, with high quality components, ceramic bandswitch, Kokusai M.F., built-in solid state power supply, antenna relay, etc. All plugs, inst. manual and p.b. microphone supplied. Nothing else to buy. Cabinets beautifully lacquered in dark driftwood wrinkle. Satin finish panel. This is a first class rig for c.w., also break-in operation, T9X note, clean chirpless keying, v.f.o. runs continuously. **£245 ($490)** inc. S.T. All tubes, diodes available in Aust.

FL-1000: LINEAR AMP., four 6JS6As in g.g., output power not exceeding 400w. p.e.p **£139 ($278)** inc. Sales Tax.

Enables operation on the three modes without necessity for compromise. Fully imported. Used by Australia's leading Phone DX'er.

ALSO AVAILABLE: FF-30DX L.P. Filters, FC-2 and FC-6 V.H.F. Converters, FL-50 Tx, and American Mosley Beams and Trap Vertical. Coming later, FT-100 Transceiver.

Brochure available from the Australian Agents: **BAIL ELECTRONIC SERVICES**
60 SHANNON ST., BOX HILL NORTH, VIC. 89-2213

N.S.W. Enquirers contact:
MOSMAN TELEVISION SERVICES
11 Ruby Street, Mosman. Phone 96-5342

FOSTER DYNAMIC MICROPHONES

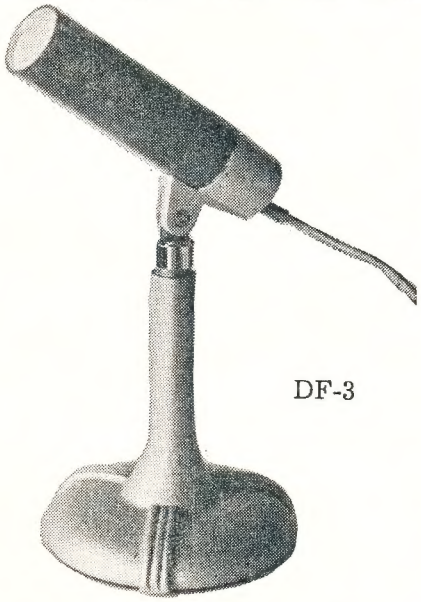

DF-3

SPECIFICATIONS:

Output Impedance .... 50 ohms or 50K ohms
Effective output level .... —55 db. [0 db. = (one) 1V. Microbar]
Frequency response .... 50 to 15,000 c.p.s.

OMNI-DIRECTIONAL DYNAMIC:

Plastic Diaphragm.
Size: 4½" long, 1¼" diameter.
Cable: 12 ft. of P.V.C.
Swivel fits 5/8" 26 t.p.i. Stands.
Colour: TWO-TONE GREY.

Retail Price 50K ohms: £4/16/0 + Sales Tax 10/0
Retail Price 50 ohms: £4/14/0 + Sales Tax 9/10

A QUALITY PRODUCT FOR TAPE RECORDERS & P.A. USERS

Marketed by **ZEPHYR PRODUCTS PTY. LTD.**
70 BATESFORD STREET, CHADSTONE, S.E.10, VIC.

ZEPHYR

Manufacturers of Radio and Electrical Equipment and Components

Agents: D. K. Northover & Co.; Neil Muller Ltd.; Homecrafts (Tas.) P/L.; Jacoby, Mitchell & Co. P/L.; T. H. Martin P/L.

SIDEBAND

Sub-Editor: PHIL WILLIAMS, VK5NN

During the past year or so I have been asked many times how to operate the old a.m. transmitter final as a linear amplifier for s.s.b. My answer is that in many cases the additional power which can be obtained with the existing power supplies, is not worth the extra trouble if the existing exciter uses a pair of 6146's or similar t.v. line tetrodes in class AB1. Since there are some exciters which use small tubes giving approximately 20 watts of power, the question of pressing the old 813 or similar final into use, arises.

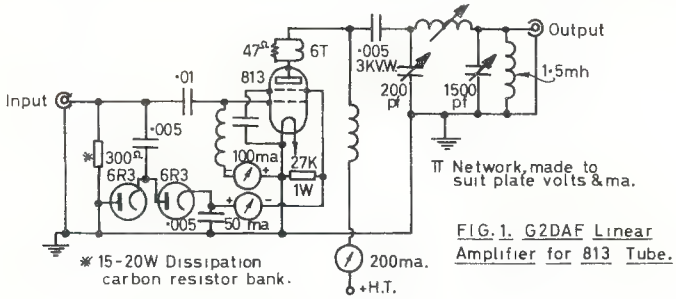

FIG. 1. G2DAF Linear Amplifier for 813 Tube.

To use these large tetrodes in class AB1 requires reasonably high bias (90v.) and screen grid voltage (600v.) and with low anode volts such as used in the old a.m. rig (say 1000 volts), the plate efficiency is low, the screen current may be high, the plate current under speech conditions without flattening is disappointingly low, and the complete exercise is hardly worth while — particularly after the neutralising operation. The only saving feature is the low drive requirements. Better results may be obtained by class AB2 operation with about 350 to 400 volts in the screen grid, but the grid circuit must be operated with "high-C" and some swamping resistance (about 2000 ohms) to minimise distortion. A stiff bias supply is essential.

The elimination of screen grid and bias supplies can save complication and has been responsible for Eimac's triodes such as the 3-400Z being designed for zero bias operation in the grounded-grid mode. Such tubes are expensive but give low distortion in relatively simple circuits.

Several circuits which were developed 7 or 8 years ago used gated screen supplies for the 813 amplifiers, viz., the ZL-Linear, and the G2MA linear amplifier. These have worked well for those who are satisfied to operate them at very low plate currents, but most people have been accustomed to more than 70 to 80 mA. in an 813 one may as well use an 807 and save the 50 watts of filament power. When pushed any harder than this, these amplifiers emit excessive distortion products and their owners are "warned off" by the neighbouring Amateurs.

One satisfactory circuit, which supplies r.f. drive to the zero-biassed grid, and rectified "s.s.b. envelope" to the screen grid, is the "G2DAF Linear Amplifier," developed and patented in England by G. R. B. Thornley. The circuit is shown in Fig. 1.

Salient points worthy of mention are the necessity for swamping the input by a 300 ohm resistor for the benefit of the driver stage and the 27K bleeder across the screen grid bypass capacitor. Some 813's do not appear to need it, but for older tubes it has been necessary to return the screen voltage to zero between words and syllables. The diodes recommended for the Cockroft-Walton voltage doubler for the screen supply are t.v. booster diodes, with high heater-cathode voltage rating 6R3's or 6AL3's should be adequate. The 813 should not be driven beyond 150 mA. on single-tone input which requires about 20 watts of drive. Plate circuit tuning component values will be determined by the plate voltage used, but the amplifier is efficient as the peak screen voltage is only about 105 volts.

The amplifier was described in the "R.S.G.B. Bulletin" for April, 1963, page 518. Further correspondence is to be found in the September, 1963, issue on page 199 and October, 1963, on page 231. Although I have not used this circuit, reports from users in England and Australia indicate that, when correctly loaded, the amplifier is capable of good output with low distortion. Reports of t.v.i. in the London area were traced to the higher output from the transmitter and the fact that B.B.C. television is on the third harmonic of the 14 Mcs. band. A 7094 amplifier in class AB1 was shown to produce similar interference under the same conditions.

THE DRAKE TR-4 TRANSCEIVER

By courtesy of Arie VK2AVA we have, this month, a run-down on this unit which is a very nice little job, now very popular in the U.S.A., but there are relatively few of these in VK at the moment.

"The Drake TR-4 s.s.b./a.m./c.w. transceiver is the most versatile unit in its class presently on the American market. It is the only one providing also near a.m. output, has v.o.x. control, break-in c.w. u.s.b./l.s.b. selection and crystal calibrator as standard equipment. It also has a true a.m. envelope detector on reception. Size 5½ in. x 10¾ in. x 14½ in. deep, weight 16 lb., 300w. peak input, power requirements 650v. at 300 mA., 250v. at 175 mA., 45-65v. bias and 12.6v. a.c./d.c. at 5.5a. Nominal output 50 ohms resistive. It uses 20 tubes (1 regulator), 9 diodes and 2 transistors (v.f.o.).

"It follows the now almost common practice of a fixed tuning range for the v.f.o. of 4.9-5.5 Mc. and crystal-controlled pre-mixing before the resultant heterodyne range is mixed with the incoming or outgoing signals. For instance, on 15 mx the v.f.c. signal is subtracted from a 35.5 Mc. crystal signal, giving a heterodyne range of 30.6-30.0 Mc., resulting in a 21.6-21.0 Mc. range after subtraction of the 9.0 Mc. crystal filter i.f. frequency. This system has the advantage of better stability in the v.f.o., better calibration, no v.f.o. switching. Also there is a higher image rejection

(Continued on Page 11)

"DRAKE."
FIG. 2. TR.4. TRANSCEIVER BLOCK DIAGRAM.

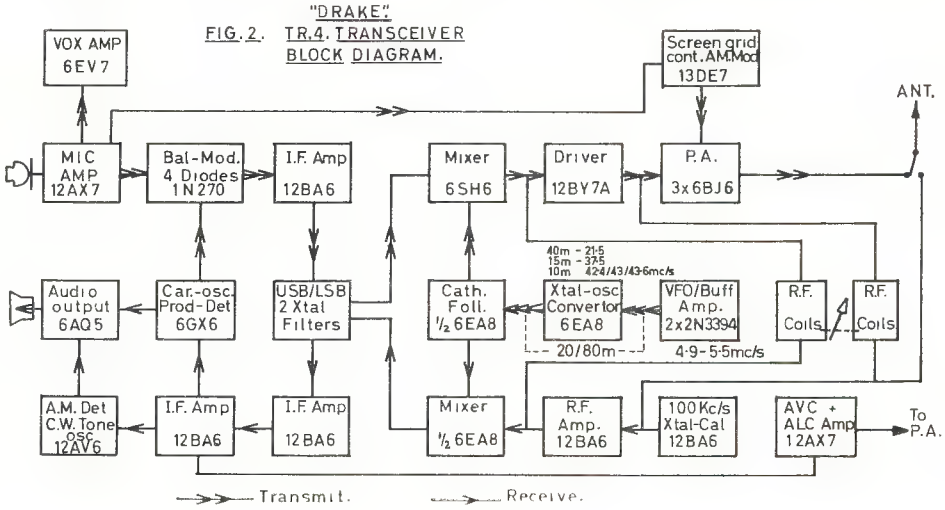

THE 80 AND 40 METRE "TRANSISTOR SPECIAL"*

JOHN S. HILL, K4QJZ

MOST Amateurs consider transistors beyond their pocket book and technical ability. Actually they can be less expensive and easier to handle than vacuum tubes. The rig described was built for a Novice nephew. It is also an ideal Field Day or brief-case transmitter for the James Bond set. Unlike so many transistor transmitters it has sufficient output to deliver a healthy signal and weekly schedules have been maintained in the Novice bands over a 600-mile distance.

● This compact (2" x 3" x 5") 40 and 80 metre transmitter is completely transistorised, simple to construct, low cost, will operate into any antenna and produces 15 watts or more output.

CIRCUIT DESCRIPTION

A transistor equivalent of the Pierce oscillator is used. Any crystals including low drive surplus metal can units can be used. 40 metre operation with 80 metre crystals is possible with some output decrease.

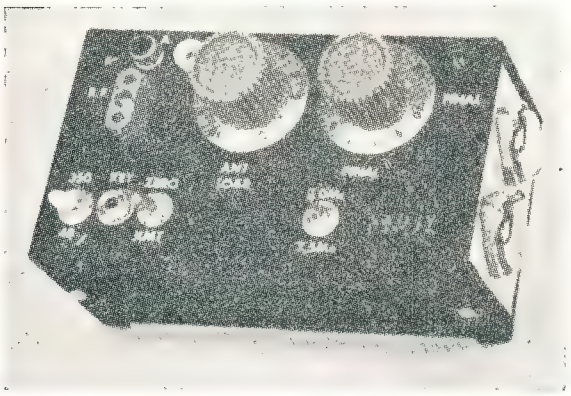

★

Top view of the transistorised 80-40 metre Novice c.w. transmitter. All controls are clearly marked. Note how the crackle finish was neatly removed in the area of the two output transistors for more efficient surface contact.

★

The oscillator is followed by an emitter tube cathode follower. Since the oscillator is relatively high impedance and the input impedance of the p.a. is very low, either tuned circuits or an impedance matching stage must be used. Power gain is limited with transistors at high power levels and the buffer gives about 10 db. gain which permits the oscillator to operate at low power. The original unit built did not include a buffer and worked well but the high oscillator input, about 1 watt, produced severe chirp and crystal drift.

The power amplifier uses two transistors to deliver about 16 watts output on 80 and 11 watts on 40 metres with a 24-26 volt power source. Input is 20-15 watts. Operation at 12-15 volts is possible but output will be about 5 watts on 80 and 0.25 watt on 40.

The power amplifier output impedance is very low, about 26 ohms at 12 watts output. An L-pi output circuit gives reasonable component values, excellent harmonic suppression, easy duplication and ease of tuning plus transistor protection. The L section (L1 and part of the tuning capacitor) transforms the low collector impedance to several thousand ohms where a conventional "vacuum tube" pi section can be used for tuning and loading. A switch is used to add tuning capacitance for 80 metres and the combination of a fixed and variable loading capacitor permit any antenna over 10 feet to be used on either band. Bulb type p.a. current and antenna voltage/current indicators are used for easy tuning, size, and cost reduction.

A d.p.d.t. switch is included for transmit-receive. In the receive mode the oscillator and buffer can be keyed to zero a receiver and the transmitter tuned circuits act as a receiver preselector and matching unit for improved results with simple receivers. A companion 80-40 receiver of the same size has been built with only two tuned circuits.

TUNING

No tuning other than the final is required. Unlike vacuum tube transmitters, the p.a. draws very little current until fully loaded whether off resonance or not. The L network is basically a high impedance at all frequencies other than resonance, the opposite of a conventional parallel tuned vacuum tube tank circuit.

Transmitter adjustments should always be for **maximum output**, not minimum p.a. current. P.a. current measurement is included only to indicate relative power input. Adjust p.a. tuning for maximum output (antenna current) voltage indicators then adjust p.a. load for higher output if possible. Continue adjusting both until no further output increase is noted. With a 50 ohm load, typical total capacitor values are:

	80 Metres	40 Metres
Tune	390 pF.	105 pF.
Load	500 pF.	310 pF.

If antennae under 30 feet or half-wave are used, the output capacitance will be much less and the tuning capacitance more; the No. 49 bulb will show less current, but the neon bulb will ignite showing high voltage feed. In general, tune for maximum antenna bulb brightness regardless of load.

A calibrated wavemeter or S meter should be used for initial tune-up on 80 metres since the final doubles very efficiently. Mark the capacitor settings for future reference.

COMPONENTS

The chassis used was a BUD, CU 3006A. The PADT 50's are mounted on one end using the entire case as a heat sink. Clean off the crackle finish, use mica insulating washers and a silicon grease when mounting. RFC1 should be low resistance; use a ¼" loop stick core and at least 20 turns of No. 28 wire or larger. No component values

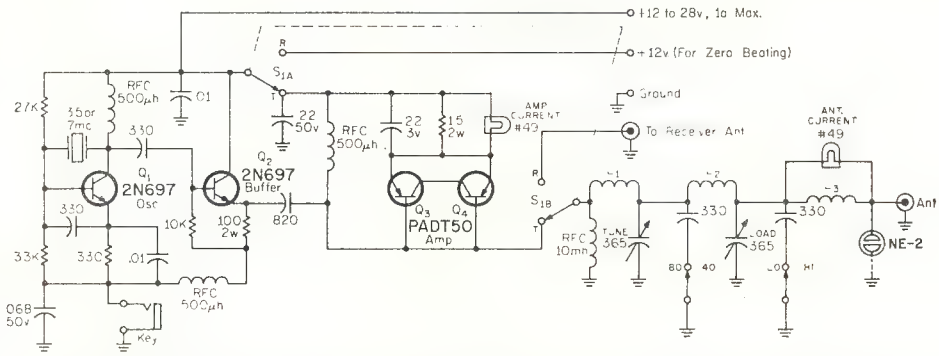

Fig. 1.—Circuit of a transistorised 80 and 40 metre c.w. transmitter. The buffer heat sink must be in 10 in.² and the Power Amp. heat sink 20 in.². All capacitors greater than one are in pF.; those less than one are in μF. All resistors are ½ watt unless otherwise noted. Currents shown are for a 25 volt supply on 80 metres with 16 watts output.

L1—22 turns ¾ inch o.d. at 32 t.p.i. Air Dux 632 or equiv.
L2—30 turns ¾ inch o.d. at 32 t.p.i. Air Dux 632 or equiv.
L3—5 turns cotton covered wire on small ¼ inch powdered iron core.

Adjust turns for normal lamp brightness at maximum output into 52 ohm load.

RFC1—See text.

* Reprinted from "CQ," April 1966.

are critical except for the p.a. coils which should be close to the values shown.

The NE-2 antenna voltage indicator should be mounted flat against the chassis near the No. 49 bulb with both leads connected to the antenna lead and only stray capacitance to ground. To save money the indicator bulbs may be mounted by pushing them through a rubber grommet.

The oscillator transistor requires no heat sink. The buffer transistor runs hot and a good heat sink **must** be used.

The overall size of the transmitter can be greatly reduced by using mica compression trimmers, Arco No. 303, for tuning but special knobs or screwdriver adjustments are required.

OTHER BANDS

No changes are required for operation on any frequency from 3-8 Mc. Operation on 160 metres at full power can be obtained by changing L1 and L2. Twenty metre or higher operation is not practical except at very low output, about 4 watts on 20, and 2 watts on 15, using half frequency crystals. Inductors L1 and L2 have to be changed for either band.

RESULTS

The first two contacts using a dipole were a VE3 on 80 and a W7 on 40. Both answered CQs on a Saturday night on the first call! Neither realised that low power was being used, much less transistors, until told so, at which point I suddenly became 599 instead of 579.

Since that time schedules have been maintained on a regular basis day and night from Connecticut to North Carolina with a Novice using a "disguised antenna" (fine magnet wire any length thrown into the nearest tree with no insulators). The power supply is two small 12 volt Ni-Cad batteries and a trickle charger. ●

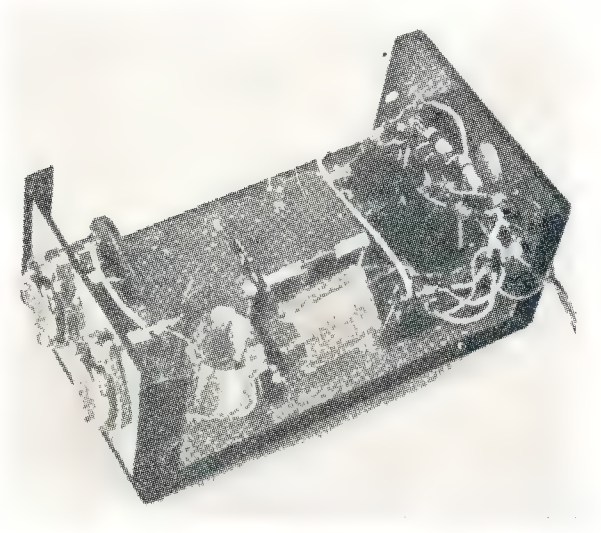

★

Overall view of the interior of the 80-40 metre Novice transmitter shows the location of the loading and tuning capacitors and the coils. The buffer and oscillator circuits are on the right end of the chassis.

★

SIDEBAND

(Continued from Page 9)

or suppression as unwanted mixing products fall far outside the wanted range.

"The double 9.0 Mc. crystal filter is a luxury, the job could have been done with one filter and u.s.b./l.s.b. carrier crystal switching. However, as the carrier crystal frequency remains constant, there is never any chance of operating frequency shift when changing sidebands. The a.m. operation, with a diode detector and no b.f.o. interference on reception, is unique. Full carrier is inserted by unbalancing the balanced modulator and the screen supply to the final tubes passes through the low-mu triode section of the 13DE7 audio-amplifier, giving a type of controlled carrier amplitude modulation, not unlike s.s.b. operation. The final stage can therefore handle a fair amount of a.m. as no constant carrier limits the input to the final.

"The set is provided with a plug for external second v.f.o. operation. With the proper extra v.f.o. unit connected, switching of the particular wanted v.f.o. on reception or transmission is done automatically through the internal transmit-receive relay and controlled by a 4-position knob on the external v.f.o. One can then transmit and receive on two different frequencies in one band. Some tricky switching and input-output coupling to the filter is used, but otherwise the circuits follow normal s.s.b. design practice. Note in the block diagram that the final amplifier output stage is separated from the receiver tuned circuits. They are parellelled with other high impedance tuned circuits in the transmitter line-up providing better selectivity.

"The Drake TR-4 is a well-built unit with a well-calibrated dial and linear permeability tuning over the full v.f.o. range. It has a good receiver but its a.v.c. action and S-meter operation leave a bit to be desired. One has to "fiddle" with the r.f. gain control to keep strong signals from distorting. The lack of an audio amplifier between the product detector and audio output stage no doubt makes the detector do overtime! Also, there is a "birdie" on reception on 21.2 Mc., the fourth harmonic of the v.f.o., and on 40 metres strong signals will show up on odd spots. The cause of this is that the third harmonic of the v.f.o. overlaps the heterodyne mixing range in the 16 Mc. range. However, these odd signals are 60 db. or so down on the unwanted spots, so never very loud and they tune three times faster than the genuine signals. It would have been better if the 40 metre band coverage had been 6.7-7.3 Mc. A change in the conversion crystal of 21.5 to 21.3 Mc. would do the trick as the odd reception signals would then fall outside the Amateur band range (below 7.0 Mc.)."

Correspondence received has included many requests for information on equipment. I gather there are many Amateurs who do not have access to overseas literature and so do not have much of an appreciation of the commercial type numbers and what they represent. One Amateur said he did not want these descriptions so that he could buy the gear but so that he would not have to sound so ignorant while in QSO with overseas stations. This point of view is appreciated, and Arie has promised further information which should help to satisfy the demand for information. 73, Phil 5NN.

TECHNICAL ARTICLES

Readers are requested to submit articles for publication in "A.R.," in particular constructional articles, photographs of stations and gear, together with articles suitable for beginners, are required.

HINTS AND KINKS

FILED INFORMATION

The following is an idea which I feel may be of interest to many Amateurs who, like myself, often have difficulty in remembering details of past QSOs, names, places, whether QSLs have been sent or received, etc., etc.

Simply it involves printing a QSL card which consists of two parts. One is the normal card giving details of the QSO on the standard QSL size of $5\frac{1}{2}$ x $3\frac{1}{2}$.

The other section, which can be any desired size, is a tear off section on which details of the QSO can be recorded and filed for future reference when required.

Thus in one simple operation a QSL can be written and details filed. I feel sure that the little extra cost involved in printing would be well repaid.

Geoff Wilson, VK3AMK.

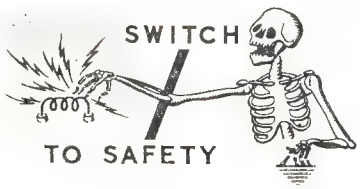

DF-2

FOSTER DYNAMIC MICROPHONES

FOR HAND-DESK USE

SPECIFICATIONS:

Output Impedance .. .. 50 ohms or 50K ohms
Effective output level .... —55 db. [0 db. = (one) 1V. Microbar]
Frequency response .... 200 to 10,000 c.p.s.

OMNI-DIRECTIONAL DYNAMIC:

SIZE: 3" x 2-1/8" x 1".
Cable: 12 ft. of P.V.C.
Switch: on-off.
Desk Stand. Clip folds for hand use.
Colour: WHITE.
Plastic Diaphragm.

Retail Price
50K ohms
£2/14/0
+ Sales Tax 4/9

A QUALITY PRODUCT OF EXCELLENT DESIGN

Marketed by **ZEPHYR PRODUCTS PTY. LTD.**

70 BATESFORD STREET, CHADSTONE, S.E.10, VIC.

ZEPHYR

Manufacturers of Radio and Electrical Equipment and Components

Agents: D. K. Northover & Co.; Neil Muller Ltd.; Homecrafts (Tas.) P/L.; Jacoby, Mitchell & Co. P/L.; T. H. Martin P/L.

NOW AVAILABLE—

THE 1966 EDITION

★ A.R.R.L.—Radio Amateur's Handbook

The Standard Manual of Amateur Radio Communication

Price **$6.10** posted, or 58/6 and postage 2/6

NOW AVAILABLE—

★ The Radio Transistor Handbook

by Stoner & Earnshaw. Price **$6.65** posted, or 64/9 and postage 1/9

THIS UP-TO-DATE HANDBOOK COVERS A WIDE RANGE OF COMMUNICATION FOR BOTH AMATEUR RADIO & COMMERCIAL APPLICATIONS

McGILL'S AUTHORISED NEWSAGENCY

Established 1860
"The G.P.O. is opposite"

183-185 ELIZABETH STREET, MELBOURNE, C.1, VIC.
Phones: 60-1475--6-7

AN F.E.T. PREAMP. FOR 144 Mc.*

ALLEN KATZ, K2UYH

ALTHOUGH transistorised pre-amplifiers have been on the v.h.f. scene for several years, they have never really found acceptance on the 2 metre band. On the other hand, transistors are in almost universal use on the 70 Cm. band. The reason for this neglect on the part of two metre operators is twofold. First of all there is the feeling that nothing can beat the performance of the vacuum tubes presently in use. And secondly, there is the knowledge that transistors do tend to overload much more readily than tubes.

Possibly if more two metre operators were aware of the fantastically low noise levels transistors now produce on 432 Mc. they might begin to question the perfection of their tube front ends. (It is now possible using the best in low noise v.h.f. transistors and common emitter circuits to obtain a noise figure on 432 better than that of a 416-B on 144 Mc.[1]) But then again there is still the problem of overload and cross modulation. After all how many 70 Cm. stations have to put up with the equivalent of a fellow with a Gonset a few blocks away. It is this problem of overload which first brought the f.e.t. to our attention.

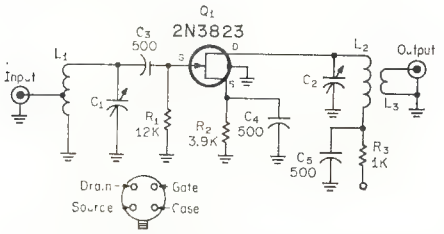

Fig. 1.—Circuit diagram of the two metre f.e.t. pre-amp. All capacitors are in pF. and all resistors are ½ watt.

FIELD EFFECT TRANSISTORS

The f.e.t., a relatively old semiconductor device (first patented in 1935), has only recently become available to the Amateur and the electronics industry in general.[2] Its operation, covered in several good articles, resembles more closely that of a pentode vacuum tube than any transistor.[3] It has a high input impedance as contrasted to the low input impedance of a regular transistor. It is this quality which explains the f.e.t's high resistance to overload and cross modulation, and our interest in the device for use as a two metre pre-amp.

There are two types of f.e.t's (N channel and P channel). The N channel biases identically with the triode vacuum tube (negative voltage on the gate, positive voltage on the drain). The gate, source, and drain are the names of the f.e.t. elements which correspond respectively to the grid, cathode and plate of a vacuum tube. As expected, the P channel biases exactly opposite to the N channel type.

The noise figure of a good v.h.f. f.e.t. remains almost constant (approximately 1.5 db.) as frequency is increased up to about 200 Mc. and then rises sharply.[4] Thus, though an f.e.t. at the present stage of the art will not produce as good a noise figure as that of many transistors on 432 Mc. (about 4 db. minimum), it should perform as well or better than the best transistor on 144 Mc.

It is said that the proof of the pudding is in the eating . . . and there is no better proof than hearing with one front end that which you can not hear with another. When we constructed our first f.e.t. pre-amp. we did not expect to hear anything outstanding. For how much better can one get than a good 416-B on two metres? Maybe one db. On this point we were greatly astounded. For after the initial tune up, we found that we could pull signals which were undetectable on the 416-B about half an S unit out of the noise with the f.e.t. To say the least we were jubilant. Furthermore, the f.e.t. performed as predicted and gave us no trouble with overloading.

CIRCUIT

Fig. 1 shows the schematic of a 144 Mc. pre-amp. using an N channel (TI 2N3823) f.e.t. in a common source circuit. F.e.t's may also be used in common gate configurations (the f.e.t. equivalent of grounded grid), but common source appears to give a better noise figure.

The circuit is simple and the components inexpensive. Thirty-five cent 1-10 pF. tubular plastic piston trimmers are used to tune the input and output circuits to resonance. The tap on the input coil should be adjusted for best noise figure, which according to theory is about one-eighth of the way up the coil from the grounded end for a 50 ohm input. We found the optimum tap point to closer to one-quarter of the way up. The output coupling loop is adjusted for maximum gain. Bias is provided by a 3.9K source resistor which should supply about —2.5 volts of gate bias for a 9 volt drain supply.

CONSTRUCTION

The amplifier was constructed on a 4" x 2½" piece of copper clad board. Ordinary copper or brass plates could be used as well; we just find printed circuit board a particularly easy material to work with. The photograph and Fig. 3 show the layout. Care should be taken to make sure the input and output circuits are well shielded from each other. If this precaution is not followed a neutralisation problem may develop. In the two f.e.t. pre-amps. we have constructed thus far no such problem was encountered. However, should neutralisation prove a problem, inductive neutralisation, as used in vacuum tube circuits, may be used to cure it.

The amplifier described in this article is now in use at WA2FGK's QTH. Andy's operating results using the amplifier speak for themself.

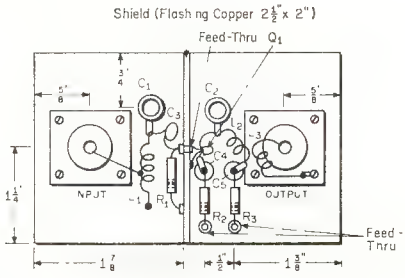

Fig. 2.—Layout of the f.e.t. two metre pre-amp. built on a 4 x 2½ inch copper clad board. The shield is a 2½ x 2 inch piece of flashing copper.

One final note, remember that an f.e.t. pre-amp. will add about 12 db. of gain to your receiving system. Thus though the f.e.t. front end may not overload, this does not mean that your h.f. receiver's front end will not overload. To avoid this problem, insert a variable pad between your converter and h.f. receiver.[5] Adjust the attenuation of the pad to a point where the noise output of the converter just rides over the noise level of your receiver. ●

---

* Reprinted from "CQ," May 1966.

[1] Brown et al, "V.h.f. Column," "CQ," Nov. 1965, p. 82.

[2] Kolk, P., "The Insulated Gate F.E.T.," Kmc. Semiconductor Corp., Long Valley, N.J., Nov. 1964.

[3] Angelo, E., "Electronic Circuits," Second Edition, 1964, McGraw Hill, p. 210-211.

[4] Application Notes, "V.h.f. Tuned Amplifiers Using The TI 2N3823 F.E.T.," Texas Instruments Inc., Dallas, Texas, Sept. 1965.

[5] Glanzer, K., "T-Pads for R.F. Circuits," "CQ," July 1964, p. 31.

☆

"THEY AND ME"

Ever hear a member say—"THEY ought to run our club this way?"

Ever wonder who are THEY, who get the brunt the live-long day?

THEY are the ones some call a clique, who plan the work and make things tick.

THEY fix the lights and sweep the floor; THEY handle every needed chore.

THEY keep the clubroom up to snuff; THEY worry about the heat and stuff.

THEY line up speakers, pictures too, and the people who will work for you.

THEY do the leg work, write the mail, provide a programme without fail.

Directors' meetings THEY attend, committee meetings without end.

On evenings THEY could spend at home, on your club's business THEY must roam.

THEY take new members into hand; THEY run instruction sessions, and . . .

THEY must manager all the work other members prefer to shirk.

Some pay their dues and think they may stand and smirk.

THEY pay the same dues, it's true, but gain no more than YOU and YOU.

Is paying dues your duty's end, or can a helping hand you lend?

As true as "GOD can make a tree," YOU ought to change the THEY to WE.

—"Scara News."

SUNSPOTS AND PREDICTIONS

Frank Hine, VK2QL, has agreed to prepare an article for "A.R." on the aspect of propagation as it specifically applies to the Amateur Service and will include discussion on the Prediction Charts as supplied by I.P.S. and currently appearing in "A.R."

In the meantime, the following tables are the mean and smoothed mean sunspot numbers which he receives from I.P.S. This covers from the minimum period in 1954, and any Amateur taking the trouble to analyse the table will see that the increase in sunspot numbers of the current cycle is greatly lagging the peak of the record-breaking cycle and the climb to that peak.

Briefly, the "mean" indicates the average number of sunspots observed during a particular month, and "smoothed mean" is a 12-month running period of observation. It is the smoothed sunspot number, plotted over a long period of time, which exhibits the well known cycle variation.

The Observatory at Zurich, which has maintained records since 1749, has estimated the next peak in 1968.7 will reach **only 100** as against the last peak of 201.2 in 1958.

Pending information to be supplied in greater detail, users of the charts may find the following of assistance.

The M.U.F. curve is the Maximum Useable Frequency for reliable communication by means of F layer reflection. Above that frequency, reflection may not be expected.

The A.L.F. curve is the Absorption Limiting Frequency, or the lowest useable frequency predicted, and frequencies below that can be expected to be absorbed beyond the ground wave. However, the closer we get to the A.L.F. the greater the absorption and the weaker the signal.

Where the A.L.F. curve crosses and exceeds the M.U.F. curve in frequency, **no** communication is possible by F layer reflection.

Do not take the times shown in Al VK4SS' DX column as factual for VK. He is dependent, as I was, on overseas information for his column. The times are often suitable for the opposite hemisphere, as for example, the reference to TN8AF in July "A.R." The short path to West Africa M.U.F. is only 11 Mc. at 2000z, whilst on the long path the A.L.F. exceeds 14 Mc. For VE1AED in Egypt, the A.L.F. exceeds 14 Mc. from 0430z to 1100z, so you see you would be wasting your time if you expected to hear those stations **under normal propagation**. I say under normal, but keen DXers know that without warning, we get abnormal conditions when anything can happen.—VK2QL.

HERE IS VALUE!

FL-50 S.S.B. TRANSMITTER

Five bands, 50w. p.e.p. s.s.b., c.w., a.m.; 6JS6A p.a., 5 Mc. crystal filter, c.c. (v.x.o.) or ext. v.f.o., a.l.c., p.t.t., bk.-in c.w. Built-in 117/234v. a.c. pwr. supply, ant. relay, pi output with variable ant. loading. Superb performance, appearance and construction. All tubes and diodes available in Australia. Use as a complete transmitter, or as exciter for linear or v.h.f. transverter.

Price: FL-50 £125 ($250)

Matching FV-50 V.F.O.
Price: £32 ($64)

If purchased together, only £149 ($298)

Sales Tax inc., Freight extra.

Australian Agents:

Bail Electronic Services
60 Shannon St., Box Hill N., Vic.
Phone 89-2213

For N.S.W. Sales and Service:

Mosman Television Services
11 Ruby Street, Mosman
Phone 96-5342

COMPLETE SUMMARY OF SMOOTHED MONTHLY MEAN VALUES OF SUNSPOT NUMBERS AT ZURICH

Year	Jan.	Feb.	Mar.	Apr.	May	June	July	Aug.	Sep.	Oct.	Nov.	Dec.
1954	6.4	5.6	4.2	3.4	3.7	4.2	5.4	7.2	7.8	7.9	9.4	12.0
1955 ...	14.2	16.4	19.5	23.4	28.8	35.1	40.1	46.5	55.5	64.4	73.0	81.0
1956	88.8	98.4	109.2	118.8	127.4	136.9	145.5	149.6	151.4	156.0	159.9	164.3
1957	170.2	172.2	174.3	181.0	185.5	187.8	191.4	194.4	197.2	199.5	200.8	200.0
1958	199.0	201.0	201.2	196.8	191.4	186.8	184.7	184.9	183.8	182.2	180.8	180.5
1959	178.6	176.8	173.5	168.4	164.4	161.4	155.8	151.2	146.2	141.0	137.2	132.6
1960	129.0	125.0	121.6	119.6	117.0	114.0	108.6	102.4	97.8	92.8	87.4	83.6
1961	80.2	74.8	68.8	64.3	60.0	55.8	53.1	52.4	52.3	51.8	50.9	48.7
1962	45.2	41.8	39.8	39.4	39.2	38.3	36.8	35.0	32.7	30.8	30.0	29.8
1963	29.4	29.8	29.8	29.0	28.8	28.2	27.7	27.2	26.9	26.0	23.8	21.3
1964	19.5	17.8	15.4	12.7	10.8	10.2	10.4	10.4	10.0	9.7	10.3	11.2
1965	12.0	12.3	12.7	13.8	14.7	15.2	15.4	16.5	17.2	19.4	21.9	23.9

COMPLETE SUMMARY OF MONTHLY MEAN VALUES OF SUNSPOT NUMBERS AT ZURICH

Year	Jan.	Feb.	Mar.	Apr.	May	June	July	Aug.	Sep.	Oct.	Nov.	Dec.
1954	0.2	0.5	10.9	1.8	0.8	0.2	4.8	8.4	1.5	7.0	9.2	7.6
1955	23.1	20.8	4.9	11.3	28.9	31.7	26.7	40.7	42.7	58.5	89.2	76.9
1956	73.6	124.0	118.4	110.7	136.6	116.6	129.1	169.6	173.2	155.3	201.3	192.1
1957	165.3	130.2	157.4	175.2	164.6	200.7	187.2	158.0	235.8	253.8	210.9	239.4
1958	202.5	164.9	190.7	196.0	175.3	171.5	191.4	200.2	201.2	181.5	152.3	187.6
1959	217.4	143.1	185.7	163.3	172.0	168.7	149.6	199.6	145.2	111.4	124.0	125.0
1960	146.3	106.0	102.2	122.0	119.6	110.2	121.7	134.1	127.2	82.8	89.6	85.6
1961	57.9	46.1	53.0	51.4	61.0	77.4	70.2	55.8	63.6	37.7	32.6	39.9
1962	38.7	50.3	45.6	46.4	43.7	42.0	21.8	21.8	51.3	39.5	26.9	23.2
1963	19.8	24.4	17.1	29.3	43.0	35.9	19.6	33.2	38.8	35.3	23.4	14.9
1964	15.3	17.7	16.5	8.6	9.5	9.1	3.1	9.3	4.7	6.1	7.4	15.1
1965	18.5	14.3	11.3	6.8	26.4	15.5	11.9	8.6	16.3	21.2	15.5	17.0
1966	26.7	23.5	24.5	47.5	43.7	46.4						

DURALUMIN, ALUMINIUM ALLOY TUBING

IDEAL FOR BEAM AERIALS AND T.V.

★ LIGHT ★ STRONG ★ NON-CORROSIVE

STOCKS NOW AVAILABLE FOR IMMEDIATE DELIVERY

ALL DIAMETERS—¼" TO 3"

Price List on Request

STOCKISTS OF SHEETS—ALL SIZES AND GAUGES

GUNNERSEN ALLEN METALS PTY. LTD.

SALMON STREET, PORT MELBOURNE, VIC.
Phone: 64-3351 (10 lines)
Telegrams: "Metals," Melb.

ADELAIDE GAM MELBOURNE

HANSON ROAD, WINGFIELD, S.A.
Phone: 45-6021 (4 lines)
Telegrams: "Metals," Adel.

Book Review

MULLARD VOLTAGE REGULATOR (ZENER) DIODES

This book should quickly become a standard reference for everybody interested in electronics. Although voltage regulator diodes are mainly of use in transistorised equipment, they are also very useful in valve circuits.

Most of us have encountered the problems associated with the lower limit of 70v. for gaseous regulator tubes—voltage regulator diodes completely fill the gap from 0 to 70v.

This book completely covers the subject including characteristics of voltage regulator diodes in general and the Mullard range in particular; voltage reference circuits ranging from a simple stabiliser to a complete bench power supply for transistor circuits; voltage shifting circuits; voltage clipping circuits; and miscellaneous applications such as bias circuits, video amplifier, instrument protection, and non-linear function generator.

The book is available from all Mullard offices throughout the Commonwealth, retail price being 85 cents, postage 7 cents.

NEW CALL SIGNS

MAY 1966

VK2BAI—C. L. Matthews, 4 Potts St., Kingsgrove.
VK2BGK—G. S. Kiernan, C/o. O.T.C. Receiving Station, Bringelly.
VK2BHX—W. R. Boyldew, 108 Bayview St., Warners Bay Heights.
VK2ZEC—E. A. Chalker, Telopea Rd., Hill Top.
VK2ZFQ—J. E. Andersen, 9 Breaside Cres., Earlwood.
VK2ZPK—P. A. Kerr, 32 Russell St., East Gosford.
VK2ZRV—F. R. Forrester, 175 Margret St., Orange.
VK3ZBT -M. L. Bartlett, 11 Ranelagh Dr., Mt. Eliza.
VK3ZKJ—J. R. Adamson, 76 Shafer Rd., Blackburn North.
VK3ZND—J. D. Vivian, 19 Thurleigh Ave., Croydon.
VK3ZRC P. D. Robertson, 10 Bath Rd., Burwood.
VK3ZSC—G. F. Coward, 332 Buckley St., Essendon.
VK3ZSR—A. C. Greening, 3 Ferguson St., Ascot Vale.
VK3ZST—W. D. Brain, 179 Gladstone Rd., Dandenong.
VK3ZTU—A. L. Tuckerman, P.O. Box 43, Kangaroo Flat.
VK3ZVV—R. J. Halligan, 41 Windsor Ave., Mt. Waverley.
VK3ZXO—T. P. J. Cosway, 102 Christmas St., Northcote.
VK3ZYD—L. L. De Stefano, 13 Sheales St., Dandenong.
VK3ZZG—I. R. Gillard, 25 Elliott Ave., Balwyn.
VK3ZZO—D. S. Thomas, 24 Albert St., Mt. Waverley.
VK4EP—P. Ellis (Rev. Bro.), St. Patrick's College, Shorncliffe.
VK4LH—L. Grimshaw, 36 Leigh St., West End, Townsville.
VK4ZGP—G. R. Phillips, 8 Chathams Post St., Enoggera.
VK4ZLB—B. J. Byrne, 17 Boyd St., Wilsonton, Toowoomba.
VK4ZMW—M. J. Willett, 18 Chisholm St., Stafford, Brisbane.
VK4ZRL—R. D. Ross, C/o. Commonwealth Bank, Rockhampton.
VK4ZTF—T. F. Armstrong, 2a Phillip St., Toowoomba.
VK5CU—D. Clift, Flat 1, 25 Fitzroy Tce., Fitzroy.
VK5PX—D. A. Millar, 90 Portrush Rd., Payneham South.
VK5ZAU—B. J. Bryant, 1 Kilner Rd., Greenacres.
VK5ZFW—A. S. White, 70 Devereux Rd., Beaumont.
VK5ZHF—M. G. F. Huizinga, 14 Birch Gr., Dernancourt.
VK5ZNN—T. G. Norris, Port Clinton.
VK5ZTC—Adelaide Teachers' College Electronics Club, Kintore Ave., Adelaide.
VK6GK—W. B. Nielsen, C/o. W. H. Pinniger, Ocean Beach Rd., Denmark.
VK6VH—L. W. Hoobin, 9 Lilian Ave., Applecross.
VK7ZPS—H. P. Schulz, 14 Liverpool Cres., West Hobart.
VK9JD—J. F. Dalstead, 5 Ninth St., Lae, N.G.
VK9ZCL—C. Lee (Rev. Bro.), Catholic Mission, Mt. Hagen, N.G.

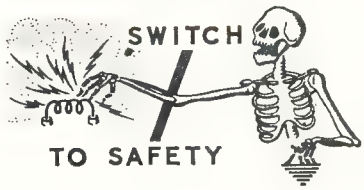

PREDICTION CHARTS FOR SEPTEMBER 1966

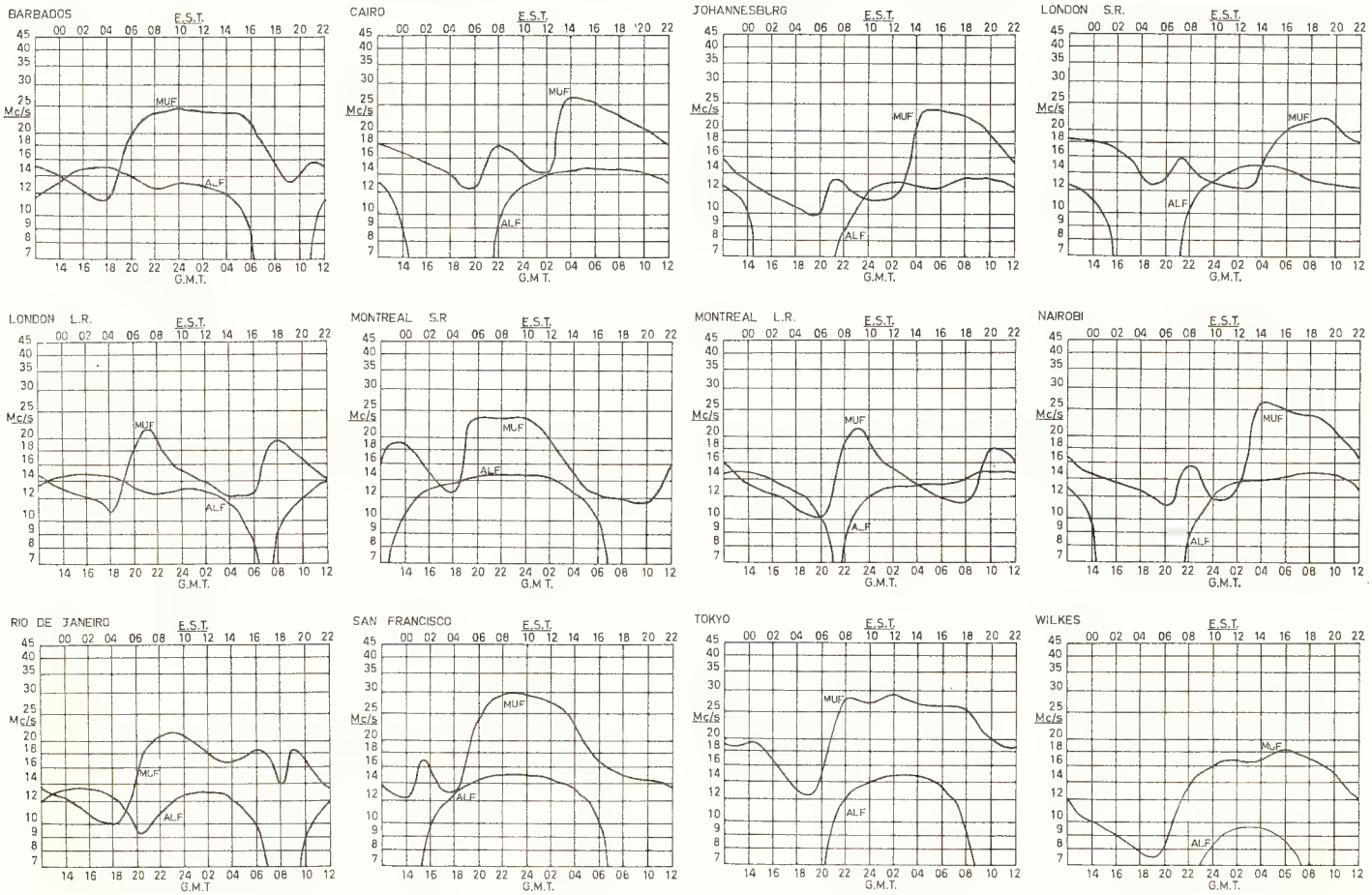

(Prediction Charts by courtesy of Ionospheric Prediction Service)

SIDEBAND TOPICS

When you decide to spend a lot of money on a modern s.s.b. transceiver, you are actually buying two things, an s.s.b. transmitter and an s.s.b. receiver, combined in one package. Most transceivers now available can transmit potent good quality signals, there are no bad ones as their manufacturers would soon be out of business. Sometimes the outer appearance or finish of a set will influence a choice, but what is frequently neglected and taken for granted is the receiver performance. All transceivers are used much more for reception than transmission and it is the **receiver** in a **Galaxy V.** that makes this set so attractive.

The GALAXY V. RECEIVER is:—

(a) The most sensitive one of the lot.

(b) The one with the lowest background noise.

(c) The only one with a near perfect a.v.c. action.

One can copy stations on the **Galaxy V.** that simply are not audible above the receiver noise in other sets. Except in very noisy locations there is absolutely no need to "fiddle" with its r.f. gain control, it can always be left at maximum receiver sensitivity. The receiver just cannot be overloaded, its a.v.c. system is better than **any** other s.s.b. receiver of my knowledge, none excepted. Why? Because of its product detector circuit, first developed by Galaxy, using a "frame grid" pentode, now copied and used in the Drake transceivers. This detector can handle a larger range of signals than any other detector.

Furthermore, the **Galaxy V.** has selectable sideband switching without shift in operating frequency, a system found only on much more expensive sets. Also, the accessories like VOX, crystal calibrator and external v.f.o. are cheaper than for other makes. The external v.f.o. does not need an extra adaptor, doubles the usefulness of the transceiver in separating the transmit and receive channels at will. In some mobile applications the smaller size of the **Galaxy V.** can also be a distinct advantage.

The best advice is: **Ask the man who owns one!**

GALAXY V. all-band S.s.b. Transceiver, with heavy-duty matching power supply/speaker unit **$600**

HY-GAIN Antennae:

14AVQ, 10-15-20-40 mx Vertical Antenna, 18 ft. tall, self-supporting, 4-band groundplane **$44**

18AVQ, as the 14AVQ, but also for 80 mx, 32 ft. tall, requires 2-3 sets of guys (supplied) **$70**

TH3JR 3-element 10-15-20 mx Junior Tri-band Yagi Beam **$96**

TH6DX 6-element 10-15-20 mx Senior Beam, 4 el. on 10 mx, 3 el. on 15-20 mx, 24 ft. boom **$200**

ALLIANCE & C.D.R. Antenna Rotators, control-indicator units for 230v. included **$55 to $180**

AUTRONIC Transistorised Automatic Keyers **$70**

MOBILE 12v. d.c.-d.c. Power Supplies, 300 and 500w. .... **$100/$120**

WEBSTER Bandspanner All-Band Mobile Whip, continually adjustable to frequency, complete with mounting assembly **$48**

★ Expected next month: 572B Triodes! All hard-to-get types of transceiver tubes in stock.

★ For the home builder: Crystal Filters, Air Trimmers, Jackson Reduction Drives, 8.0 and 9.0 Mc. Crystals, etc.

SIDEBAND ELECTRONICS ENGINEERING

P.O. BOX 23, SPRINGWOOD, N.S.W. Telephone: Springwood 51-1394

Technical Correspondence—

Diodes in Power Supplies

Editor "A.R.," Dear Sir,

In the July issue of "A.R.," Phil Williams has written a very interesting article on power supplies for Sideband. I should, however, like to say that I do not agree with all of his design considerations concerning the use of silicon diodes.

The **R.C.A. Transistor Manual** (p. 52) states that if no transient suppression is used, it is desirable to use a diode p.i.v. safety factor of three or four times the expected peak working voltage, because of switching transient overvoltages generated in the power transformer. Even when transient suppression is used, a safety factor of at least 1.5 is required, because "suppression" is not the same as "elimination". Transient suppression can be obtained simply by putting about a 0.01 μF. condenser across the primary of the power transformer. When the primary is run from the 240v. mains, that condenser ought to be rated for at least 600wv., since the condenser must withstand the transients it is trying to suppress.

In addition to the **R.C.A. Transistor Manual**, this subject has been discussed in the **Selected Semiconductor Circuits Handbook, G.E. SCR Manual**, and in numerous periodicals, eg. "Equipment Exchange Bulletin". And yet one frequently sees published designs which lack that all-important condenser. Why? Possibly because one can indeed ignore the existence of transients for a long time, until that one time when you turn the supply on (or off) at the wrong time in the cycle—then poof! This is taken stoically with the same attitude that one replaces valves. But a properly rated diode should **never** need replacement. And you can be reasonably sure that the one time it blows will be when you turn on the rig just after hearing a W1 call CQ on 2 metres.

Phil Williams suggests that a 400v. diode be used for each "130v. of transformer output," presumably meaning 130v. r.m.s. coming from the transformer, but this means a peak of 130 × 1.4 = 182v. 400v./182v. =2.2 safety factor. This 2.2 is inadequate for power supplies not protected by the transient suppressing condenser, but excessive for ones that are protected. Excess safety factor means higher unnecessary cost when putting diodes in series for h.t.

But why put 400v. diodes in series for h.t.? Several of the advertisers in "Amateur Radio" sell diodes rated higher than that, and two of them sell 2,000 p.i.v. diodes at a comparatively reasonable price; this even makes it practical to replace 866s with diodes, for obvious reasons. The only justification for putting a lot of diodes in series, is to save money. Sometimes this is better done with a string of diodes, or a few; before deciding on a design, it would be wise to see whether requirements are better filled by a few h.t. diodes rather than many m.t. ones.

The p.i.v. applied to a half wave diode feeding a condenser input filter is **twice** the peak voltage coming from the transformer, because the condenser adds to it on the off cycles, not to mention the fact that a half wave circuit suffers far more from transient overvoltages than a full wave design; in the latter case the transformer is loaded on the off-cycle, but for the half wave it isn't. Well, if VK5NN's Fig. 2 actually feeds 240v. r.m.s. to his half wave 400v. diode, he is in trouble: 240v. r.m.s. = 340v. peak. 2 × 340v. = 680v. That is rather a lot to ask from a 400v. diode, not to mention safety factors.

Choke input filters can be responsible for horrid transient voltages too. With valves this was no great problem (unless running a mercury vapour one near its limits!), but with silicon diodes it can be critical. Again, the cure is simple: a 0.1 μF. condenser in series with a 1K resistor, shunted across the choke. If I were you, I'd draw in that R-C across all diagrams of chokes following silicon diode rectifiers. The 0.1 μF./1K should work in most cases. More detailed considerations can be found in the silicon diode article in the January 1965 issue of "QST" or reprinted in "Amateur Radio" several months later. [August 1965.]

Part of the confusion with respect to safety factors comes from the ambiguous or conflicting ratings of diodes. Australian and British commercial firms tend to give their diodes a working rating which includes a 1.5-fold safety factor in it already; American or surplus merchandise tends to be rated closer to "absolute maximum". Thus, an OA210 is nominally 400v., but its absolute rating is about 600v., which explains why it can be used with success on 240v. mains. Similarly the BY100 is nominally 800v., but its maximum voltage is given as 1,200, and is probably even better.

I do not think that it is desirable to include the p.i.v. safety factor in the nominal voltage rating of a diode because, as I discussed above, the actual safety factor needed depends on the circuit used. I think that it is more sensible to rate diodes explicitly at the "absolute maximum" value, making quite clear that this maximum is truly absolute, and letting the experimenter exercise his own discretion in applying the devices. This discretion must include some knowledge of transient suppression, safety factors, and circuit behaviour; silicon diodes are neat and cheap, but they are not nearly as simple and uncritical as selenium metal rectifiers or valves. See "Silicon Diodes and Common Sense," in the September 1965 issue of "CQ".

While I am about it, I might mention that because of the violence of the switching action, silicon controlled rectifiers operating from a transformer can require a p.i.v. safety factor of 2 or more, even when the a.c. input is transient suppressed. Design for suitable R-C suppressors is discussed in the "Miniwatt Digest" of January 1965. SCR's working directly from the mains are somewhat less critical, but it is still hazardous to use an SCR directly on the 240v. (r.m.s.) mains unless it has a p.i.v. rating of at least 500v., preferably 600v.

To a certain extent, the application of a diode p.i.v. safety factor will depend on the reliability one needs. I have run diodes with a 1.1 safety factor when powered directly from the mains, with no sources of inductive disturbance nearby. But I also cooked a bunch of diodes in a rather h.t. circuit using a safety factor of 1.7, because the transformer was unusually inductive, or something. In this case I solved the problem by applying the formula used when putting a resistor in series with the transient suppressing condenser. R-C combination is more effective than C alone, because the capacity used is appreciably larger. But it can come to grief unless the formula is used, because of the danger of shock-excited resonance of the transformer with the condenser, if the latter is too large. The formula can be found in the "Miniwatt Digest" for July 1962, or in several of the data sheets in the Mullard "Technical Manual," Vol. 4, for diodes. Approximate values are given in the February 1965 issue of the "Equipment Exchange Bulletin," and the principles involved are discussed in the May 1965 "E.E.B."

—R. L. Gunther, VK7RG.

[The above letter was referred to VK5NN, whose reply follows.—Editor.]

Editor "A.R.," Dear Sir,

On first reading VK7RG's letter I had thoughts of having done something dreadful in the S.s.b. Notes for July, but on consulting Fig. 2 I was relieved to see that I had not done the dirty deed of which I was accused. If Lee sticks his chin out he will then see through the lower portion of his bifocals, that there is only 120v. applied to the rectifier in the bias circuit, and not 240v.

Following a loud "Touche!" I will now proceed to agree with him, and ask his forgiveness for omitting all the fuses, filters (r.f.), bleeders, milliammeters, and the 1,000 pF. capacitors across the diodes, all of which I have used in my own equipment (see "The Tetra-Linear," May 1964 "A.R.").

My own station uses a total of 82 silicon diodes in various configurations and I have only ever damaged one on a choke input circuit. This was replaced and an R-C circuit connected from choke input terminal to ground, or as he suggests, across the choke—but I prefer to ground them. An 0.05 μF. 1,000v. paper condenser and 1.2K resistor were installed.

The figure of 130 volts a.c. per 400v. p.i.v. diode was published by Mullard and Philips in the data sheets for the OA210 rectifier, and I have used these, 1N1763s, HR25s, RS25AFs and possibly others in series, always with 330K and 1,000 pF. across each to equalise surges and back voltages.

We are fortunate that higher voltage rectifiers are available now for less than I paid for my original OA210s. By all means use them with as much safety factor as you feel you can afford. Amateurs always tend towards the use of I.C.A.S. ratings, don't we.

The Sideband Notes for July were intended to be a source of a few ideas which might prove useful for giving the voltages for s.s.b. equipment. The tips in Lee's letter are worthy of consideration, too.

—Phil Williams, VK5NN.

SWL

Sub-Editor: D. GRANTLEY, WIA-L2022
Alexander Ave., Hazelbrook, N.S.W.

When listeners get together it is inevitable that their conversation will turn to the situation pertaining to QSL cards and difficulty in obtaining same. Don't despair chaps, for this month some arrived at the VK2 S.w.l. QSL manager's QTH for reports dated as far back as 1960. What caused the delay is a mystery to us, but the main point is that they did eventually turn up and were mailed out promptly. All of which brings me to the point. Our bureau manager is Chas. Aberneathy, who has something to say to s.w.l's new and old, who avail themselves of the W.I.A. outward bureau. I quote "During my handling of the VK2 s.w.l. inwards QSLs I find a considerable number of cards being returned to the sender stamped "Does not collect from VK2 Bureau." This is logic, I guess, as a large percentage of VK2 Amateurs are well away from the city. I suggest that listeners send all VK cards direct with S.A.S.E., as this will give them a better chance of getting a reply at the same time it will save double handling by the bureau. I would like to add to Charles' remarks, that it is necessary to keep a stamped envelope at the bureau if you are expecting cards back through that source. Address is Chas. Aberneathy, 30 Urunga Cr., Miranda.

I have just returned from a hurried 10 days' holiday in Melbourne, unfortunately I was unable to meet any of the VK3 boys as time did not permit, nevertheless I was able to contact quite a few by phone enabling us to have a natter over things in general. Melbourne as usual turned on one of its best weather performances, sufficient indeed to make myself and family dispense with any ideas we had of returning there permanently.

VK2 NEWS

It was most gratifying to the Committee to see such an improved attendance at the last meeting, and we look to a continued improvement as we continue with our successful film nights. These screenings, which were mentioned in the last issue of "A.R.," feature the "History of Science series." At this meeting it was a pleasure to welcome back Syd Underwood, who was promptly elected Vice-President, together with Alan Chatto as liaison officer upon the resignation of Ross Erwin. Ross resigned as he was unable to attend the meeting. Listeners are reminded that copies of the AR7 manual are still available from Chris Middleton-Williams at the cost of one dollar plus ten cents postage.

AWARDS

Catalogued in the "odd and interesting" class is a new award sponsored by DJ8OT, E. Warnecks, Postfach 1244, 562 Velbert, West Germany. Called "International Mobile Diploma," it is available to any Amateur or s.w.l. who has confirmations for 100 mobile stations. These stations can be ones signing /M, /MM or /AM. Any band may be used, including v.h.f., and confirmations can be a mixture of a.m., c.w. and s.s.b., but all contacts must be for the period after January 1, 1963. Cost is ten IRC's and you send check list of QSLs held, this to be certified by two licensed Amateurs.

S.W.L. D.X.C.C.

We congratulate our prominent VK4 s.w.l., Chas. Thorpe L4018 on becoming the holder of certificate number 4. Other holders in order of issue are Eric L3042, Don L2022 and Warwick L3211. Any more takers?

DX NEWS

FP8CQ, operating in this year's CQ DX contest is a suspected pirate. FL8RA QSLs via W2LJX. QSLs for MP4BFS go to Box 138, Bahrein, whilst MP4BFT's go to K0SZY. VK9AM has been reported from Nauru on 21,230 using a.m. VU2DIA on Andaman Is., heard by L2022 with a T7 note on 14,050. ZD9BE should be using s.s.b. by the time you read this. 7X2MD's manager is VE3EUU, whilst 7X2AH asks for his QSLs to manager WA4STL. All Amateur activity from 9GI ceased in March this year. Operation previously mentioned as probable from the Vatican in July, showed up on 40 metres from HVLCN. QSLs for this operation to K6CYG with IRCs. XE0AL has K7AL for manager. Watch K6KH for odd spots in the area of Guam for the next two years. K6JIC will handle his QSLs, and operation will be on all h.f. bands, and possibly 160 as well. A further reminder that Box 7388, Newark, N.J., 07107, U.S.A., is the Hammerslund QSL QTH.

AROUND THE SHACKS

Ernie Luff reports QSLs from FO8AB, OH0NJ, GC2FMV, G3MEQ, G3HTN, VP9CF, KG4AA, FW8RC, KP4CK, VE6ALX, and quite a number of W's. Loggings included HR1JAP, KC4USN, ID1DIA, FB8WW, HH9DL, VE2BUJ/port SU, 5N2AAW, ZS3JJ, TG9, ZS2, TG8, ZD7, HK, YU and YS2. Ern has qualified for the newly issued G award, from the progressive Elizabeth A.R.C.

Harry Major, who has assisted many a young radio enthusiast, sent me the wanted information on the mixer circuit requested last month, and would like it known that he will provide a copy of any circuit which he can supply, at a cost of 4c plus S.A.S.E. These copies are really good, and I commend this service together with the query service which Harry runs. His RX by the way is a BC-624A.

Bob Mutton L7031 reports inward QSLs from OK3UL and VP5RB. His main listening has been on 40 metres, where HK, YV, KL7 and a host of W's were logged. Alan L5065 has received QSLs from UJ8KAA, IT1TAI, KR6MB, EA4GZ, JA7JM, LU8DAH, KX6EI, KG6IF, HM1AB, YV5AHR and DJ9YW. Warwick L3211 is going great guns on the QSL list, new ones are VQ8AR, HA5KBB, VP5RB, VK9DJ, ZD8HL and VS9MP. New countries heard were VP2LS, UJ8KAA and HH9DL.

Mac Hilliard has been amongst the Europeans, including YO8CF, UP2WY, UC2DB and HI7XL on 40 metres, and what is more he heard them on c.w. Mac is spending more time in mastering this mode of transmission, and I am sure we will be hearing more from him at contest time.

Bob Halligan L3229 is concentrating on his antenna system at the present time, a 40-foot tower for his 2 metre beam, a 2 metre GP (ever tried 15 metres on a GP chaps?), dipoles for 10. 15 and 40 metres being portion of the new project. New countries heard by Bob were PX, 5WI, and TG9 (40 metres), whilst inward QSLs were XV5AA, CN8BB, FW8RC, CP6FR, UB5ARTEK, K4OSR/KB6, LA5YE, UD6KAR, VS9AFR, ZC4CI, UO5PK and HC1CV.

Tony Wege of VK5 also dropped me a line re last month's note to the effect that he was trying to re-form the VK5 group. Apparently I was misinformed on this matter, but somebody is attempting to reorganise the group, but not Tony who is tied up with final year at the University.

L2022, still trying to regain lost ground after several years' of light activity, is again sending out large quantities of reports to unconfirmed countries only, whilst trying to get up to the 300 heard mark. Band conditions are still good at Hazelbrook, where YU, OE, UA6, YO, FB8 and UC2 have been heard on 7 Mc., with ZS6SX, BV, VU2DIA, HC1TH, EA8FE, KG6AAY and CR6EI being logged on 20 c.w. With a very unstable receiver, loggings on 15 metres are almost impossible, however, the usual JA's and W's have been noted. A new shack is at present under construction, this will give greater comfort for writing, operating and recording.

That concluded the news from our members, but before closing I would like to acknowledge tapes from John Simons and Bernard Hughes of G land via the I.S.W.L. tape club, and Mac Hilliard also Bryan Prosser, on holidays in the general direction of VK5.

VK3 NEWS

We just made it with the divisional news from VK3, by letter from Ian Woodman. I quote, "Great news to the listeners' group during the month of June, was the return of their AR7 after eight months' use by VK3WI. The group still continues to get new members along to its meetings, this is most encouraging to all those who put so much time and effort into the administration. The secretary is at present compiling a list of financial listeners for the next call book. Members are asked to watch for notices of future meetings, as visits of technical interest, and visiting lecturers have been organised for later months. Elections for office-bearers are due, and these will be reported in these columns as soon as possible in order to let the country members know what is happening. At the time of writing there has been a delay with the printing of the newsletter "Zero-Beat," and we hope you will all be patient for the next copy which will arrive in due course. President Harry Roach is still looking for reception reports for the Sunday broadcast from country to city members. If you can help, please post your report to Harry at 28 Foster Avenue, Glenhuntly, S.E.9, Vic.

DX LADDER

There have been a few minor changes in the centre positions of the ladder, but the main item of interest is Warwick Smith's elevation to position number 3. Here is the present situation:

	Countries Conf.	Countries Hrd.	Zones Conf.	W States
E. Trebilcock	293	296	40	50
P. Drew	192	265	38	40
W. Smith	139	214	35	7
D. Grantley	133	297	39	35
A. Westcott	106	159	34	11
R. Kearney	104	170	37	8
G. Earl	103	168	34	18
M. Hillard	98	246	33	14
R. Halligan	84	156	30	6
E. Luff	83	152	28	22
B. Prosser	79	241	17	8
C. Aberneathy	70	107	33	14
A. Raftery	67	188	26	11
B. Mutton	62	100	28	10
B. Mackintosh	41	102	20	5

YRC

Misgivings have (rightly) been expressed about the harmful effect on the boy, the instructor, and Y.R.S. generally if there happens to be an accident with a.c. mains during practical instruction work. Complete safety must be aimed at. Our policy here in VK1 is that a.c. mains work is strictly prohibited until after the passing of Junior Certificate and discouraged even then. Where lack of money for transistors and associated parts forces the use of donated a.c. mains equipment in the progress after Junior or Senior Certificate, the a.c. mains equipment work must be very strictly supervised by the instructor, instruction must be given on the dangers of electric shock, and proper resuscitation methods must be taught. This is still not enough—parents must be informed in "writing" with receipt returned to the instructor. Anybody interested in our four foolscap pages on "Effects of Electric Shock, Precautions with A.C. Mains, Methods of Resuscitation, Information for Parents, and Club Regulations on A.C. Mains" should send me a S.A.E. for a copy.

We don't hear often enough about VK6 but recent news from Laurie VK6ZEA shows excellent progress. Laurie's own club at Wesley College has produced six A.O.L.C.P.'s in W. Hines 6ZBJ, R. Godley 6ZEG, M. Vellnagel 6ZEV, T. Broom 6ZFX, J. Hughes 6ZEK and P. Pemberton 6ZEP—a great effort. Also in VK6, Christian Brothers' College Club has a membership of 30 and operates VK6LV. A third club should soon be set up at Carmel.

In VK4 the State Supervisor reports 17 active clubs registered up to the end of June, five ex-Y.R.S. members have A.O.L.C.P., one has A.O.C.P., two club instructors have A.O.L.C.P., and another is waiting for P.M.G. Exam. result. The numbers indicate that things are going very well—only regret that the personal details are not known.

VK2 has reached a total of 44 registered clubs and 1966 looks like a record year. Eight new High School clubs were recently registered and I'll be very surprised if these are not the result of the posting to schools of the graduates from Sydney Teachers' College Y.R.C. (Other Divisions please note urgently—have you infiltrated your Teachers' Colleges yet?) Keith 2AKX reports greatly increased activity at Junior Certificate level. There is much activity on the air for Y.R.S. Radio Telephony Certificates. Clempton Park Baptist Boys' Brigade are regulars on Saturday afternoon. Canterbury District Scouts are going to stress this training aspect. Radio Telephony Syllabus is obtainable for all by sending large S.A.E. (and extra stamps for duplicating costs) to Mike Hooper, 182 Melville St., Hobart.

Consideration is being given to the suggestion by VK3 Y.R.S. types that there should be a special Y.R.S. badge to be sold to members at cost so they can wear it for mutual recognition. Comments have been received from most supervisors, but individual club leaders who would like to offer comments are asked to contact their state supervisors with suggestions on designs and other matters. 73, Ken 1KM.

DX

Sub-Editor: ALAN SHAWSMITH, VK4SS
35 Whynot St., West End, Brisbane, Qld.

It would seem that the Don Miller stint from Heard Is. was not a success in the full sense. Two thousand QSOs were made, mostly with W's. Only 50 Europeans were worked and very little else. The question that comes to mind is, was it all worth it? It's only a guess but it appears the venture cost more than a dollar per QSO.

NOTES AND NEWS

Easter Is.: Jose CE0AC is said to be on at irregular times on 7001. Try listening 0500z.

Nepal: Terry 9N1BG reported on 14,108 s.s.b. Worked here 1800z. QSL to H.Q., British Ghurka, L. of C. Dharan.

Oland Is.: SM6BNU/7 on now 14,135. Try the SR for this one, however, he may be QRT by the time this reaches you.

Hong Kong: Luke VS6AZ. On fairly regularly. Listen around 1400z on 14,195.

Marcus Is.: Now reported QRV again. Try 14.200 from 1200z.

Andaman Is.: Hedge VU2DIA still working them daily on 14.015 around 0130z.

Glorieuses: Jose CR7GF ran into generator trouble on the first leg of proposed DXpedition, consequently he doesn't expect to get on from Aldabra and Tromelin until late August at the earliest. Will then go to Farguhar, for which he already has a permit.

Pantelleria: IP1AA and IP1JT expected to show soon from Khamma. If you do manage to QSO these stations, QSL to Dave Noon, 1434 Brydges St., London, Ontario, Canada.

Pitcairn Is.: Tom is now to be found more often on 14,176, 0600z. He still keeps to his other schedules, however, i.e. 21,060, 2200z Mondays and sometimes 21 c.w. later.

Prince Edward Is.: VE1AKZ is said to be on from this spot very soon for period approx. 5 weeks. No times or frequencies available.

(Much of the above by courtesy of Geoff Watts.)

Gurin—U.N. Trust Territory: I0RB on 14,250 may count for D.X.C.C. Try around 0600 or 1300z.

International Kon-Tiki: Report to hand says that five men are setting out on a raft to drift from Peru to Australia. In the wake of the Norwegians and William Willis's "Age Unlimited." A Ham rig is supposed to be aboard. Date of departure is at present fixed for end of August. Any more information on this adventure would be greatly appreciated (so please chaps keep me posted).

Desroches: Plans for this spot also went astray. Transport difficulties. They may try it again in a couple of months.

Stockholm: Originally prefix SM5 but now SM0. Several are QRV. Just in case you didn't know.

Ceylon: 4S7PB on 14,110, 1800z. QSL K2MGE/. Also very active is 4S7DA on 7/14 c.w. Best time for the former is 1400z or 1930z. The latter 0130z.

American Samoa: Active as of now W5VWU/KS6, 14,002. Duration of operation not known.

Bonin Is.: This spot now has two ops. and their joint QSL manager is K6ZDL. Modes are 1 and 14 c.w./s.s.b.

Kerguelen: FB8XX active daily 14,140, 0400z.

Bahrein: Roger MP4TBO should show up any time now. 14 c.w./s.s.b. Duration of operation not known. QSL VE1AKZ.

Rare Ones Coming Up: Information to hand says that Ack and Don are planning operation from KC4, FO8 Clipperton, ZA, YI, PY0 and more in the not too distant future. Keep an ear to the frequencies.

(Much of the above by courtesy of Bill WA2EFN. Ed. LIDXA.)

Turkey: As reported previously TA2BK is on 14 c.w. and been worked here. TA2AA has shown up on 14 s.s.b., and said to be audible on LP from 1400z.

Tunisia: Previous notice on this place was that 3V8EU would commence operation. Now it seems it was all a foney. Another report to hand, however, says that WB6CIY is about to cause a stir. No other information.

Juan de Nova: Further word from Jose CR7GF says that he will endeavour to include this rare one in his itinerary probably about next October or earlier if possible. Call will be FR7ZQ.

Haiti: HH9DL is QRV 14,190 and listening on 14,210.

U.S.S.R.: If the call U5ARTEK raises your blood pressure, forget it. QTH is Crimea. Box 88, Moscow, for a QSL. QRG is 14,240 s.s.b. also 14 c.w. after 0400z.

Portuguese Guinea: CR3KD worked 21,060. (Right alongside frequency of Tom VR6TO and about the same time, 2200z.)

(The bulk of the above by goodwill of Joe W4MVB. Ed. Fla DX'er.)

Jan Mayen Is.: Latest from here says that some four or more LA's are busy on the air. LA2IK, LA5AK, LA6XI, LA5CI, all on 14 c.w. The latter also has s.s.b. all bands

Spitzbergen: LA4FG/P is a loner from this spot at present.

British Guiana: 4U2BZ said to be operating 14 c.w. Try 14,075, 0500z.

Wallis Is.: Robert FW8RC as reported before mostly at week-ends. 0700z around 14,240 Kcs. QSL P. T., Mata-Uta, Wallis, New Caledonia.

Brunei: Another one from here is VS5JC, 14 c.w., low end daily around 1300z. QSL Sgt. Cooper, Ghurka Sig. Sqdn., c/o P.O. Box 777, Singapore.

South Orkneys: LU1ZG is active on 21,251 c.w. (yes, c.w.). Says he will also work s.s.b. stations on this frequency.

(From Jim G3UGT. Ed. Airwaves.)

Uruguay: Remember Enzo CX2EJ. Sadly the sun has set on his disappointment, for this "old-timer" has just passed away at the age of 72 years without receiving a single VK QSL. A letter from his son to Chas. VK4UC tells of this. Enzo in his time worked quite a few VKs.

Bootleggers: If recently you worked FJ8CC or KS4AC, they are probably phonies. (VK4UC.)

ACTIVITIES

Ken VK3TL reports working these juicy ones over the past week or two. All 14 Mc.: EA8EZ (Canary Is.), FP8CV, GC5ACH, HR1CP, LX2UW, ON4NM/LX, ON8XA, PX1YR, VO1IB, VO1GB, VP1HR, VP2AA (Antigua), VP9AX, VP9FC, VU2DIA (Andaman), 3A0DX, 5N2AAE, 9Q5QR, plus others. Best QSLs received were: HK0KL, SL7CA, 9V1MT, VE0MY, CO8MN, HR1JAP, ZP5LS, GD3ENK, XV5AA, OH0VF, BV1USG, 5Z4FB, FW8ZZ, UA1KED (F.F.L.), GW4NZ, HC8JG, FP8CV, GC8HT (Guernsey), KS4CA (Swan Is.).

Dud VK4MY reports conditions on the Gold Coast only fair and been QRL working on Tx and aerial. He logged 14 c.w.: UA4HW 0400z, UL7BX 0130, W5VWU/KS6 0150, ZS6RM 0700z, KR6WT 0545, UR2DE 0130, 6Y5BB 0645, and more.

Peter VK4PJ buys with things other than A.R. but managed these choice ones, around 14,125, s.s.b.: HI8XAL, YV5CMQ, F2BA, HK4PZ, VE2PA, SV1BH, HB9QO, HR1KS. Mostly around 2100z.

QTHs

VP2AA via VE3ACD; FP8CV, W2GKZ; PX1YR, W2GHK; LX2UW, W2GHK; 3A0DX, K6CYG; VP1HR, Stann Creek Valley, British Honduras; ON4WM/LX, K2MYR; VP9FC, WA2VID; 9Q5QR, Box 10,061, Kinshara, Republic of Congo.

(My thanks to Ken VK3TL for these—Al.)

SUMMARY

Recently "CQ" magazine held what might be termed a miniature Gallup Poll on the question of the Ham and his equipment. While, for obvious reasons, the latest transceiver-type unit was immensely popular, it was surprisingly found that quite a number still preferred to build their own equipment. In fact, on a population increase basis, the home-brewer was more than holding his own.

While there is something to create, and a challenge to go with it, there will always be triers. The end-product, most certainly will not look as well, and probably will not function as efficiently as the factory job, but it will provide a double satisfaction. The making and the using.

Henry Ford, one cold and frosty morning, was found vigorously chopping firewood. When reminded he did not have to do it, his reply was, "Yes, but this way, it warms me twice."

My thanks this month to Editors Jeff Watts, Bill WA2EFN, LIDXA, Joe W4MVB Fla. DXer, Jim G3UGT, Airways, and from Chas. VK4UC and S.w.l. C. Thorpe. 73, Al VK4SS.

Aswel Audio Phaseshift Networks

Small quantity available in reply to recent demand.

Price $8 including postage

ASWEL

17 Clisdell Ave., Canterbury, N.S.W.

Phone 78-5368

W.I.A. V.H.F.C.C.

Cer. No.	Call	Confirmations 144 Mc.	50 Mc.
1	VK5GG		114
2	VK3QV	215	
3	VK2HE	102	
4	VK2HE		118
5	VK7LZ		112
6	VK6BE		300
7	VK2HO	132	
8	VK2ABR		177
9	VK5ZAX		100
10	VK4ZBE		100
11	VK3FW	157	
12	VK4ZAZ		847
13	VK5BQ		165
14	VK3QV		204
15	VK4HD		104
16	VK2ADT		210
17	VK4ZBI		163
18	VK3NB	110	
19	VK2ASZ	100	
20	VK9XK		402
21	VK7LZ	104	
22	VK3ZHF		104
23	VK3ZGP		118
24	VK2ZRU	103	
25	VK4ZCH		101
26	VK9AU		107
27	VK5KK		143
28	VK1VP		100
29	VK4ZAL		100
30	VK2ASZ		100
31	VK4ZLG		100
32	VK6ZDS		103
33	VK5ZCR		107
34	VK3ZIG		100
35	VK4ZK		110
36	VK5WV		103
37	VK3ZE	214	
38	VK6VV		102

Correspondence

Any opinion expressed under this heading is the individual opinion of the writer and does not necessarily coincide with that of the publishers.

C.W. PRACTICE

Editor "A.R.," Dear Sir,

For the benefit of those who really do wish to pass the Morse Exam., the following information may prove of interest.

Sydney radio VHP/VIX broadcasts 24 hours a day for ships. Traffic lists consisting of ships' call signs in alphabetical order, followed by traffic, are broadcast at 0001, 0401, 0801, 1201, 1601, and 2001 G.M.T. on these frequencies: 4286 Kc., 6428.5 Kc. and 8478 Kc. Weather messages in plain language and code groups of five figures are broadcast on the same frequencies at 0130, 0530, 0930, 1330, 1730 and 2130 G.M.T. Speeds range from 16 to 20 w.p.m. The ship/shore frequencies in the region of 6300 and 8400 Kc. provide useful practice.

San Francisco Radio stations KPH and KFS both give daily press bulletins: KFS at 1920 G.M.T. on 6365 Kc., and KPH at 1900 G.M.T. on 6488 Kc. KFS is 25 w.p.m. and KPH is 28 w.p.m.; those with tape recorder facilities can record these and play them at half speed.

You may care to publish this information for the benefit of those who need c.w. practice and do not wish to attend a class. For those who want extra last minute practice, VHP on 6428.5 often runs coded messages to ships at 18 w.p.m. at 8.30 a.m. most mornings.

—John H. Smith, VK3IQ.

BRIGHT STAR CRYSTALS

FOR ACCURACY, STABILITY, ACTIVITY AND OUTPUT

Our Crystals cover all types and frequencies in common use and include overtone, plated and vacuum mounted. Holders include the following: DC11, FT243, HC-6U, CRA, B7G, Octal, HC-18U:

THE FOLLOWING FISHING-BOAT FREQUENCIES ARE AVAILABLE IN FT243 HOLDERS:—
6280, 4095, 4535, 2760, 2524 Kc.

5,500 Kc. T.V. Sweep Generator Crystals, $7.25; 100 Kc. and 1000 Kc. Frequency Standard, $17; plus Sales Tax.

Immediate delivery on all above types.

AUDIO AND ULTRASONIC CRYSTALS—Prices on application.
455 Kc. Filter Crystals, vacuum mounted, $13 each plus Sales Tax.

ALSO AMATEUR TYPE CRYSTALS—3.5 AND 7 Mc. BAND.

Commercial—0.02% $7.25, 0.01% $7.55, plus Sales Tax.
Amateur—from $6 each, plus Sales Tax.
Regrinds—Amateur $3, Commercial £3.75.

CRYSTALS FOR TAXI AND BUSH FIRE SETS ALSO AVAILABLE.
We would be happy to advise and quote you.

New Zealand Representatives: Messrs. Carrel & Carell, Box 2102, Auckland.
Contractors to Federal and State Government Departments.

BRIGHT STAR RADIO

LOT 6, EILEEN ROAD, CLAYTON, VIC. Phone 546-5076

With the co-operation of our overseas associates our crystal manufacturing methods are the latest.

THE RADIO HAM

The Radio Ham is a man apart,
With valves in place of a human heart.
He doesn't speak when with his mates,
He only ever "communicates."

His thoughts are always far away,
With dots and dashes and 3GK,
His family knows that first of all
He must answer at once the "CQ" call.

Crackles and voices from near and far,
Echo whenever his door's ajar.
At meals he's only half-way here,
His mind's on the voice only he can hear.

Sunday morning's the sacred time,
To call him then would be a crime.
I sometimes long for the good old days
Before Marconi and radio waves.

—Mrs. S. M. Gillespie.

— · · · —

CONTEST CALENDAR

10th/11th Sept. — W.A.E. Contest (Phone).
1st/2nd Oct. — VK/ZL/Oceania DX Contest (Phone).
8th/9th Oct. — VK/ZL/Oceania DX Contest (c.w.).
15th/16th Oct.—R.S.G.B. 21/28 Mc. Telephony Contest.
29th/30th Oct.—R.S.G.B. 7 Mc. DX Contest (Phone).
12th/13th Nov.—R.S.G.B. 7 Mc. DX Contest (c.w.).
19th/20th Nov.—R.S.G.B. 2nd Top Band (1.8 Mc.) Contest.
10th Dec./15th Jan.—Ross Hull Memorial V.H.F. Contest.
11th/12th Feb.—John Moyle Memorial N.F.D. Contest.

NON-DESTRUCTIVE *INSULATION TESTING WITH THE TRIMAX IONISATION TESTER*

The TRIMAX Ionisation Tester was developed as a means of testing insulation resistance and the onset of Ionisation at any voltage from 50-10,000 V.D.C. The testing is non-destructive and the instrument itself is completely safe to the operator. Call our Sales Department for details on the TRIMAX Ionisation Tester.

METER RANGES
0-1000/10000 Volts
0-2/20/200Microamps

L M ERICSSON PTY. LTD.
"TRIMAX" DIVISION
FACTORY CNR. WILLIAMS RD. & CHARLES ST., NORTH COBURG, VICTORIA. 'PHONE: 35-1203 . . . TELEGRAPHIC ADDRESS: "TRIMAX" MELB.
LM40/A

VHF

Sub-Editor: CYRIL MAUDE, VK3ZCK
2 Clarendon St., Avondale Heights, W.2, Vic.

Once again it is news time and I am on the deadline because of late arrival of news. Again I would like to remind correspondents that news must be in by the 27th of the month, it would be appreciated if the notes could be typed but if not please print all names and addresses. Where possible use the format illustrated in "A.R." some months ago. —Cyril VK3ZCK.

V.H.F. CONVENTION

The third Annual VK3 V.h.f. Group Convention will be held over the week-end 8th and 9th October, 1966. The Saturday events will be held in an eastern suburb of Melbourne and the Sunday events in the Mornington area.

For further particulars write to V.H.F. Convention Secretary, Peter Wolfenden, VK3ZPA, P.O. Box 36, East Melbourne, Victoria.

KNOWN V.H.F. NET FREQUENCIES IN USE IN AUSTRALIA BY 10 OR MORE STATIONS

VK2: 146.00 f.m., 145,854 f.m., 53.982 a.m.—Wollongong.
VK3: 145.854 f.m., 146.00 f.m., 146.146 f.m., 53,032 a.m., 52.525 f.m., 144.5 a.m.
VK4: 53.032 a.m.
VK5: 53.1 a.m., 146 f.m. (being formed).
VK6: 52.656 f.m., 52,525 f.m., 52,765 f.m., 52.947 repeater, 145.00 a.m.
VK7: 53.035 a.m., 144.1 a.m.

The approximate total of stations on 53.03 is close to 100 shared between VK3, VK4 and VK7.

NEW SOUTH WALES

Activity on 2 metres has been fairly good of late and stations are already planning for the New Year's Field Day which will be on similar lines to last year's. It is anticipated that a message handling event will take place on the Sunday. There will be two sections—open and 144 Mc. only. The open is for 2 metres and above, six not being eligible owing to propagation conditions, although it may be used to arrange contacts.

Scoring will be: 0-50 miles, 1 pt.; 50-100 miles, 3 pts.; 100-150 miles, 6 pts.; 150-200 miles, 10 pts.; 200-300 miles, 15 pts.; 300-500 miles, 20 pts.; over 500 miles, 40 pts.

For 432 multiply by 2, and bands above multiply by 3.

Many 52 Mc. operators will remember Tim VK2ZTM and Joe VK2ZOO, well they are off on a two-month round Australia trip. Many well-known local personalities attended a farewell dinner and everybody had a good time.

Some news that may be of interest to the VK3 chaps—Reg VK1ZMR and Graham VK1ZCG are on regularly from Canberra. Reg is on 144.02 using narrow band frequency modulation and Graham 144.090. Both Reg and Graham regularly work Dennis VK2ZOW so how about a few more of you chaps trying to contact these gentlemen of the Federal Capital. 73, Stephen VK2ZSK.

HUNTER RIVER BRANCH

52 Mc. This band has been quiet except for the week-end hook-ups on Saturday and Sunday mornings at 10 a.m.

Barry VK2ZUB at Vales Point has been working Grant VK2AXB of Sydney most week-ends on this band, some Newcastle stations have also worked him when conditions have been a little better than usual. Barry 2ZUB being south of Newcastle, receives Grant 2AXB 5 x 8 most times. Sydney stations are not usually heard at this QTH as we are north of Newcastle. Conditions have been poor owing to the very cold weather and fairly strong westerly winds.

144 Mc. This band has also been quiet, mainly because of the 'flu, cold or out of town, and more than likely by others staying near the fire or t.v.

Tony 2ZCT has returned from Sydney where he has been doing a refresher course for his employer and has worked into Sydney from his ideal QTH, on a ridge of high land at "Whitebridge" suburb of Newcastle, also working Sydney is Col 2YJ who also has a good QTH.

Ross 2ZRU of Sydney has been relaying the Sunday night v.h.f. broadcast in the Newcastle direction and has been heard up to S8, some including 2ZWM have passed in a report on the broadcast.

Barry 2ZUB will be on holidays during September and will be going to the Snowy Mountains and Cooma area, he will have 144 Mc. gear and also may have a 52 Mc. converter, so look out for him mobile.

Keith 2AKX, Des 2ZDN and a few others are now mobile on the 144 Mc. f.m. frequency, others are in the process of getting their "car-phones" going. Bill 2ZWM has had a couple of try-outs with his mobile gear, and has been heard well at this QTH. M. J. O. Brien, VK2ZMO.

VICTORIA

Activity on 6 and 2 has not been very good but there have been a couple of small DX openings on 2 metres. Other activities include the 2 metre scramble which is held on the 2nd Sunday at 2045 hrs. E.A.S.T., the 2-metre Fox Hunt on the 4th Wednesday at 2000 hrs. E.A.S.T. and the V.H.F. Group meeting on the 3rd Wednesday at 2000 hrs. E.A.S.T. in the Institute rooms. The subject for July was Antennae, and the various types of antennae discussed were: the Long Tom Quad Yagi for 432, by Ian VK3ALZ; the Spiralray Circular Polarised Yagi for 144, by Roger VK3ZRY; Stacked Helices for 2 and 432, by Bill VK3ABP, and Cyril VK3AEE on his 15-foot dish for 432 and his proposed 30-foot dish. Further information on these may be obtained by writing to the speakers themselves enclosing a stamped addressed envelope. Cyril VK3ZCCK.

Eastern Zone.—Activity on both 6 a.m. and 6 f.m. is very high. Some stations are still having contacts with Melbourne stations on 2 a.m. and Peter VK3ZDP at Sale is back on 2 a.m. and s.s.b.

Western Zone.—Activity on 6 metres is next to nil owing to high gain Channel 0 antennae and low signal strength from Melbourne's Channel 0. Activity on 2 metres looks forward to a bright future. Brian 3ZBS and Bob 3ZFT are constructing gear, and promise to be on soon. John 3HW's 2 metre gear is under modification. Eric 3ZL, John 3ZDM, Brian 3ZPU are consistent rivals on this band. 2 metre mobiles have been worked at good signal strength at distances in excess of 50 miles from Ballarat. 2 metre f.m. operators can expect contacts with Ballarat before December.

Activity on 70 c.m. Both John 3ZDM and Brian 3ZPU are hot rivals on this band. John 3ZDM runs 80 watts to a 6/40. Brian 3ZPU runs 40 watts to a 6/40. Both stations are using identical antennae, which consist of 4/13 element yagis, and also a circular element Quad Yagi which has boom length of 6 wavelengths. Both stations run schedules to Melbourne and Geelong.

Project Australia.—The Ballarat Astronomical Society has given a grant and facilities for construction of antenna and equipment for this project. This society has backed Ballarat Amateurs in the field of radio astronomy for many years, and is looking forward to the success of this project.

North-western Zone.—Ray VK3ATN reports "after a great deal of discussion and the use of a computer at the 'Bell' Lab. in New Jersey the beam window of his 4 section stacked Rhombic has been determined as being bounded by S (declination) N. 22 deg. to N. 25 deg. to G.H.A. (Greenwich Hour Angle) 152 deg.-155 deg. From this information we predicted an Azimuth and Elevation and thus a time on the 18th July. Our prediction was within 1 minute of practical results. Ray was able to copy K6MYC/K6CLM via 144 Mc. Moonbounce up to 15 db. and at times stronger above noise which was S5 for about 20 minutes (2300-2320 G.M.T.). During this time I did not listen for my own echoes, however, they would have been there. K6MYC/K6CLM were unable to copy my signals or their own because of an S7 noise at their end." Ray is using a noise blanket which he finds is most effective to the extent that a S2-3 signal can be heard through a S7-5 noise.

K6MYC/K6CLM are using a 320 element collinear array semi-fixed and 1 kw. input. Ray is only using 150 wt. input.

Ray says there are now quite a number of W's who are getting very interested in 144 Mc. Moonbounce. Ray's has four 15-feet.-long horizontal beams at one end of the 4 section stacked Rhombic so that he can change Azimuth by approximately 1 deg. 12 ft. It is possible that 52 Mc. and possibly 432 Mc. Moonbounce will be attempted in the future using the same antennae with small modifications. The above news was received from Ray VK3ATN.

QUEENSLAND

July was a busy month for the V.H.F. Group here in VK4. In the first week in July officers and some members attended the monthly Council meeting of the Institute (Queensland Division). As a result of this meeting the v.h.f. group has been officially recognised as an integral part of the Queensland Division. Further, Council will refer all matters pertaining to v.h.f. and u.h.f. activities and policies to the group for guidance and comment before committing the Division to any policy or commitment. Over the week-end 9th, 10th July the Sunshine State contest was held. The contest was so popular on the v.h.f. bands that more points seem to have been scored on these bands than on all the h.f. bands. Many stations operating were either portable or mobile and some long-distance contacts were made.

At the July general meeting of the Queensland Division, the lecture was devoted to v.h.f. techniques. Thanks to the many v.h.f. boys who supplied equipment for the large display. Indeed, the display was so big that the chairman and minutes secretary could not find a spare space to put their papers down on. The object of the lecture was to interest the h.f. boys in v.h.f. However, it seems that at least the lecture has interested the v.h.f. boys in u.h.f. Some 432 Mc. gear was on display and this showed the relative simplicity of the gear for this band.

The monthly transmitter hunt was held on the 29th July. The location had most hunters guessing. About 20 persons took part and first to find the transmitter was VK4ZRH. The transmitter was located on a ridge in Victoria Park. Afterwards everyone headed for a local coffee shop where an impromptu v.h.f. group meeting was held.

Finally, a couple of months ago a par appeared in these notes referring to George VK4ZLG. The significance of the par was of a purely local nature only. George has been spending so much time at work (4BK) that he was only very rarely on the bands. Apparently some VK3s thought that George had obtained a full call. This seems to indicate that some VK3s at least must read these notes. Peter VK4ZPL.

SOUTH AUSTRALIA

Unfortunately due to mid-year examinations this scribe has been unable to keep his eyes and ears on the v.h.f. bands during the last month. However, my agents to whom I am indebted, have passed on the news that activity has been very quiet. The latest news on the VK5 beacons is that Bob 5ZDX has them operational again, and has been checking them out at his QTH prior to the installation back at the Channel 7 Transmitter Site on Mt. Lofty. Garry 5ZK has completed the Big Wheel Antenna for 2 metres and is currently checking out its performance.

Perhaps the greatest activity heard on the bands, apart from the Sunday morning call-backs after the 5WI session, is whenever a scramble is conducted. The most recent scramble was conducted on 24th July on 2 metres. The eventual winner was Barry 5ZMW who has added many scrambles to his list of successes lately.

Recently, approximately ten 146 Mc. f.m. Channel B units have been placed into service in VK5. Whether or not they prove popular has yet to be determined as net operation has not at any time proved successful in VK5. However, there is always a first time for its success, and this could provide it, as has been achieved elsewhere, especially in VK3. 73, Colin VK5ZHJ.

☆

Publications Committee Reports That . . .

At the August meeting correspondence was received from VK3UG, VK2ZSK, VK2QL, VK2 Secretary, W.I.A. Federal Secretary and the Boy Scouts' Association.

The main item considered by the committee was the 1966-67 issue of the Call Book. Publication is scheduled for late October or early November. The Call Book will be the same size as "A.R." and contain approximately 60 pages. The cover price will be 75 cents per copy.

Further discussion was held on the subject of Prediction Charts, and some alterations will be incorporated in future issues. We are indebted to Frank Hine VK2QL for his assistance with this matter.

A new scale of advertising rates was considered and agreed on by the committee, to become effective on 1st September.

FEDERAL AND DIVISIONAL MONTHLY NEWS REPORTS

(SEND CORRESPONDENCE DIRECT TO DIVISIONAL REPORTER NAMED AT PARA. END)

FEDERAL QSL BUREAU

W9PIO, Wil Grob, is looking for an Australian YL pen pal for his daughter Diana. Diana, who is 16 years of age, and doing her last year at high school, may be reached at 115 East Liberty St., Columbia, Illinois, U.S.A.

RAG, LA5HE, who was a regular visitor to Australia when radio officer on the M.V. Beaumont a few years back, was a delegate to the I.A.R.U. Region 1 conference held in Yugoslavia during May. Rag sends his best wishes to his many VK friends.

QSLs for the final stages of Gus Browning's last DX-pedition and mainly for West African areas, were recently received from W2GHK.

Further to paragraph these notes in "A.R." regarding CX2AJ, advice has now been received from his son that his father passed away suddenly on 20th June. CX2AJ made 72 years and death was due to heart trouble. His son is finalising all QSL obligations.

All QSLs for YO2 Hams may be sent via: YO2 QSL Bureau, P.O. Box 100, Timisoara, Romania.

Ray Jones, VK3RJ, Federal QSL Manager.

— · · · —

FEDERAL AWARDS

AUSTRALIAN DX CENTURY CLUB AWARD

At the recent Federal Convention it was decided when determining the highest twelve in each section of the W.I.A. D.X.C.C. in future, allowance is to be made for "deleted" countries, of which 24 are currently involved.

Clause 2.2 of the Rules provides "should a country be deleted from the Countries List at any time, members and intending members will be credited with such country if the date of contact was before such deletion." This practice will continue.

Two totals will accompany the listing of the top twelve in each section in future. Position in the list will be determined by the first number shown which will represent the participant's total countries less any credits given for deleted countries. The second number shown will represent the total D.X.C.C. credits given, including deleted countries, in accordance with the Rules.

The first such list will appear in "Amateur Radio" next month.

—A. Kissick, VK3KB, Federal Awards Manager.

— · · · —

NEW SOUTH WALES

The July monthly meeting of the N.S.W. Division, held at Wireless Institute Centre on Friday evening, July 22, took the form of an Auction Night.

Such events have always been popular, never failing to draw good attendances, and about 100 members and visitors were present on this occasion.

Chairman Tom O'Donnell, VK2OD, dispensed with the usual preliminaries in about a quarter of an hour. The only business before the meeting was a motion by the Federal Councillor, Pierce Healy, VK3APQ, that the minutes of the recent Federal Convention be ratified, with the exception of the section dealing with the proposed constitution. This was seconded by Bill Lewis, VK2YB, and carried without discussion.

The following applicants were admitted to membership of the Institute: M. O'Grady, P. E. Corkeron, M. J. Payne, G. C. Chenhall (VK2BLC), P. C. Nieuwendyk, N. Spratt, G. T. Pile (VK2ZFG), R. G. Turner (VK2ZTR), T. S. Mayne (VK2AWM), Nepean District A.R. Club, A. E. Prentice, Leonard Deitch, R. C. Milton (VK2ZMM), Dick Treacy (VK2BAJ).

Proceedings were hen handed over to Noel Millar, VK2AQH, who, as on past occasions, carried out the duties of auctioneer both efficiently and with good humour as he attempted to extract the D.B.'s from the audience. This proved a rather difficult task, for in spite of the large attendance there was considerable buyer resistance. High reserve prices on some equipment was one deterrent to brisk bidding, but even so it would appear that many of those present came along merely out of curiosity, or perhaps in an effort to clear their own shacks of all manner of junk, at the same time resisting the usual Amateur impulse to fill up the shack again with someone else's doorstops.

This attitude is in direct contrast to the auctions held immediately after World War II, when Disposals equipment was first making its appearance. How well we remember an auctioneer of those days being almost knocked off his perch with the rush of bids, and the bidding was usually closed when he considered a sensible amount had been received. It seems those days are gone for ever.

About 11 p.m. the auctioneer called it a night. He had been assisted by Warwick Johnston as recording clerk, Bill Shakespeare, VK2AGF, as official extractor of dollars from purchasers, while equipment handlers were Norm Champion, VK2ZND, Kevin Trevitt, VK2BUZ, and Ivan Agar, VK2AIM. A vote of thanks to Noel and his band of helpers, moved by Bill Lewis, VK2YB, was carried by acclamation.

Before we get too far from the subject of auctions, we are seeking the purchasers of a receiver and a wave-meter offered for sale on behalf of the late John Peehl, VK2WJ, at the June, 1965, auction. We are holding a handbook for the former and coils for the latter, and these may be had from Ivan Agar, VK2AIM, telephone Sydney 86-5179, or address as in the callbook. Alternatively, if any reader can advise the identity of these purchasers it would be appreciated.

We are sorry to report that the Divisional President, Tom O'Donnell, VK2OD, had a fall during the month while on Institute business, when he stepped into a hole on a badly lighted footpath. Suffering abrasions and various aches and pains, he was confined to the cot for a day or so, and left the July monthly meeting after handing over to the auctioneer. Incidentally, Tom assures us that he was quite sober at the time, and he also assures us that the Shire Council which controls the offending footpath has received a few caustic comments.

Divisional Council has received a very good suggestion from Mona Swinton, VK2AXS, that a display be held of members' hobbies (other than radio). The idea has been well received and the Education Officer, Harold Burtoft, VK2AAH, has been asked to organise the display, which it is hoped will be held early next year.

The W.I.C.E.N. group held an exercise on Sunday, July 24, in the Berrima district, when there were 12 mobiles among the 17 callsigns in attendance. Much useful experience was gained by the operators as a result of this day out, one feature being the excellent coverage from VK2WI on 146 Mc. f.m. Using 50 watts to a ground plane, the headquarters station was received at S 8 south of Berrima and two-way communication was maintained between Dural and Mittagong. The W.I.C.E.N. Committee had a meeting during the month with the N.S.W. Civil Defence Director, and a report of this was to have been submitted to the August meeting.

The Far Northern Radio Club members and their families assembled at Lennox Head on 24th July for the club's quarterly meeting. After a picnic lunch, the members got their heads together and held this meeting, and we would like to commend this idea to other country clubs—and city clubs, for that matter—for it is an excellent way to have a family get-together and a meeting at the same time.

The VK2 Division's Morse Tape Service is thriving. Ern Hodgkins, VK2EH, who now conducts the service, reports increasing applications for tapes from near and far. The nightly morse practice on approximately 3550 Kc., carried out by Doug. Courtney, VK2AUC, and his band of operators, is also received with much appreciation in several States.

SILENT KEY

It is with deep regret that we record the passing of:

VK2PD—Jack D. Sibbald.

VK3XU—Gordon Weynton.

VK5UX—Leslie Wallbridge.

Many Amateurs on the air today owe their success in the A.O.C.P. to the dedicated work of these volunteers and the services they maintain.

Howard Lilley, VK2AYT, was the envy of his mates when he took off late in July for the U.S.A. for about six weeks. Howard is on the staff of ABC-TV Channel 2 and while in the States will undertake a course of study in connection with his work.

Our Zone 2 Officer, Max Francis, VK2BMK, has changed his QTH, and for the information of all concerned he is now to be found at 93 Kingdon Street, Scone.

Members of the N.S.W. Divisional Council, and indeed all thinking Amateurs, are most concerned at the lack of response in this State to appeals for I.T.U. Fund donations. It is very difficult to understand the mentality of those individuals who apparently think so little of their hobby that they would literally throw it to the wolves. It is known that while this Division is scratching along with little more than 25 per cent. of its quota, after three years of effort and appeals, the opposing forces are leaving no stone unturned in their efforts to prove that our bands are not being used sufficiently to warrant their retention by the Amateur service. And this is not confined by any means to the DX bands, for the v.h.f. segments, and the use made of them, are being scrutinised very closely by those who covet them. If we are to come out of the next I.T.U. Conference with any frequencies worth having, there are two things we must do—and do at once: Make full use of all our bands at every opportunity, and rally to the call for donations so that we will have a representative at Geneva. Our future is in jeopardy as it is, but with no one to speak for us it would be hopeless. 73, Ivan, VK2AIM.

HUNTER BRANCH

Although many dislike the winter for its short days and cold mornings, it goes almost without question that this season is the ideal time for building programmes in the shack. It seems so in the Branch area anyway and many are the reports of newly-kindled activity. On the 146 f.m. net frequency there are now five stations in operation either fixed or mobile and one more at least, Henry, 2ZGK, should be on by the time you read this. Charles 2ZLH also has been bitten by the desire to join the net operators and, having availed himself of a give-away priced unit is in the process of converting it to 146. Latest members to come up on the frequency are Des 2ZDN and Jan 2BJO. Both have converted MR3 carphones to their use and Jan runs his mobile in the 6-volt horseless carriage known affectionately as the "Lurch-mobile." It is said that quite heavy cables connect the unit to the battery! In an attempt to trap more signals, Des has erected a 3-element collinear as per the "handbook" recommendations and this has been copied by some others as well. It is possible now to hear 2WI on 2 metre f.m. at good strength at my location. All this activity on the W.I.C.E.N. frequency will no doubt do a great deal of good and provide a core of skilled operator-technicians for an emergency.

The presence of skilled operator-technicians is undoubtedly the reason for the success of the Cessnock Civil Defence radio network so ably managed by Chris 2PZ. When chaps know what is happening to the signal and how important a good aerial is then the equipment, however low powered, must be doing its job efficiently. This informed attitude is quite a long way removed from the antics of some, perhaps well meaning but misguided persons who may be seen daily cavorting to and fro in their high-powered autos—whip a-waving at the rear. Or even those others who slide up and down the spectrum, Amateur bands included, with their war game chit-chat issuing from ill-adjusted 19 sets and worse. One day perhaps the novelty will wear off and they'll give it away or else they'll become efficient and do some real signalling on spot frequencies outside our exclusive allocations. I am reminded while on the subject of a certain acting lance-blank file signaller who knew little about soldiering but just a small amount about radio being severely reprimanded when seen using a resonant aerial on a vehicle set. "You'll use an 8-foot whip, soldier!" While in the back of his official mind echoed the chorus, "The

Handbook tells me so." Perhaps we'd better forgive the previous mentioned offenders—it may have told them so, too.

Now here's something that may cause no end of confusion and end in questions asked in the house and other places where questions are asked. The fact is, as I warned last month, there are two meetings this September. The first is on Friday, 2nd, which may already have passed by the time you read this, but the second is on Friday, 30th. This move has been made necessary by the arrangement of the October holiday week-end. Such arrangement means that the first event of the convention week-end will be on Friday, 30th—the Constructional Competition, at the Technical College as always, while the Annual Dinner will be on Saturday, 1st October, and the Field Day on Sunday, 2nd. The Dinner, by the way, will be held this year at the Charlestown Community Hall—right at the traffic lights. As usual the Field Day will be at Bolton Point where there is a large hall and plenty of room for outdoor activities as well. The programme and subscription will be published in the bulletin but this I can say, there will be I think for the first time—"talk-in stations" on 2 metres f.m. and 40 metres a.m. The location of both transmitters will be at the Bolton Point Park and their purpose is to assist any who have difficulty in finding the location, or just to have a chat if there's no specific traffic. All the usual events have been arranged so watch the bulletin and listen to the broadcasts for the latest information. And please remember—there's no meeting in October!

After commencing with talk of activity on v.h.f. it is pleasing to speak now of activity on m.f., 160 metres to be precise. Colin 2BCC is having all manner of sport on this band and has had some good long-distance contacts. He says the Marconi coupler is just the thing for long pieces of wire. Susan 2BSB has at last erected an efficient aerial. It even has a balun fitted! Belmont Bob had some trouble with a tiger in his tank which burnt out all the switch contacts but in true BB fashion he sorted it out. I believe he still has trouble with Whistling Rufus, the one-man band. Paddy 2AXU learned to his displeasure the folly of having the shack in the humid atmosphere of the laundry. Never put your trust in false power transformers. Vic 2AKP had a spell on the sick list during the month but reports say he is well on the mend now. President Frank 2APO is spoken of as "Fiat's best customer," and, come to think of it, Italian equipment graces the shack, too, while Jennifer, our Saturday column writer, keeps up the family tradition. I haven't yet decided whether that sound was a heterodyne whistle or the bosun's pipe from the quarter-deck at Bolton Point, but the Navy's been in port! Bill 2XT and Les 2RJ still continue to run up the DX ladder, both at a fair old speed while Bill 2ZL still uses the same 807's as he did in '58. So there it is again; please address complaints or condemnation to me at the meeting—but please, not in October. 73, 2AKX.

CENTRAL COAST BRANCH

The last meeting of the Central Coast Branch was held on July 15 at the Gosford School of Arts. We were very pleased to welcome several visitors and two new members, Ross VK2ZRQ and Fred VK2AHX. We also have another new call sign, VK2RC, John Campbell of Wyong. John is confined to his home because of an accident some years ago and I'm sure will find Amateur Radio a very satisfying hobby. John's son is also working towards acquiring a ticket.

Ian Fyfe VK2ZIF came down from Newcastle especially to talk about transistors and from his rich fund of knowledge gave many useful hints on working with transistors. The tools ranged from an inexpensive surgical instrument to ladies' spring-loaded hair clips.

The 2 m. converter kits were made available to members and our President, Lindsay VK2ON, gave a comprehensive description of the kit to make it quite easy to assemble. All parts are available from the W.I.A., Crows Nest, and anyone interested can get full details from VK2TM.

73, Mona VK2AXS.

SOUTH-WEST ZONE CONVENTION

As we go to press we have received details of this year's South-West Zone Convention, to be held at Wagga on the Six-hour holiday week-end, October 1, 2 and 3.

Wagga Show continues into this week-end, so reservations for accommodation must be made early. What accommodation there is includes motel and camping, and those requiring same should contact Sid Ward VK2SW, 33 White Avenue, Kooringal, Wagga, without delay.

Registration for the convention will be $1.50 per adult male, with ladies and children free. The charge for the official dinner on the Saturday evening will be adults $1.75 and children 75c.

All the features and events usually associated with conventions will be on the programme, including a contest for mobileers while en route for Wagga on the Saturday.

A cordial invitation is extended to all, and the organisers hope that many VK3's will find their way over the border into sunny New South Wales for this popular convention. Sid VK2SW will be pleased to supply any further information for the benefit of intending customers. 73, Ivan VK2AIM.

OBITUARY

JACK D. SIBBALD, VK2PD

We regret that we have to record the death of Jack Sibbald, VK2PD, who contracted pneumonia during July and passed away after a short illness.

Obtaining his A.O.C.P. shortly after World War II, Jack was a member of the Kingsford Radio Club in company with several well-known Amateurs from the eastern suburbs.

He was active for some time on 144 Mc. and 14 Mc., but had not been active for some years prior to his death.

By occupation an electrical fitter, he had been engaged on experimental work with the Institute of Technology at Kensington.

A widow, three sons and one daughter are left to mourn their sad loss, and to them we offer the sympathy of all members of the VK2 Division.

LESLIE WALLBRIDGE, VK8UX-VK5UX

The VK5 Division announces with deep regret the sudden passing of Leslie Walter Wallbridge, VK8UX-VK5UX, on July 26.

A keen and interested member of the VK5 Division for 25 or more years, Les never appeared on the city scene very much, as his duties of schoolmaster took him to a number of the important country towns with consequent very little chance of personal contacts.

Best remembered as a resident of Cook pre-war and until just recently as 5UX of Alice Springs, he made countless friendships through his beloved hobby of Amateur Radio, although meeting very few of them personally.

A regular attendant at the W.I.A. picnics of the past, he covered fantastic distances at times to show his loyalty to the Division and to be among those present.

To his wife Beryl, and his three sons, Derek, Roderick and Geoffrey, the Division extends its sincerest sympathy and hopes that the passing of time will help to erase the shock and sadness of his passing.

So mote it be.

BLUE MOUNTAINS BRANCH

A cold night kept members away for the July meeting at Lawson, and with the attendance poor it was agreed that the business could be held over till the August meeting. Our club Chef 2ZFZ was unable to attend, thus two lots of supper turned up, so with only a few to fight over the radiator and the usual rag-chews, a good night was had after all. Bill 2HZ, on behalf of the few present, wished to convey his thinks to my XYL for the extra supper, I might add that home-brew cakes are a rare item in our household.

Well the band chatter amongst members has been a little better. Bob 2ASZ helped in getting Trev 2TM and yours truly going on 6 the other night, thanks Bob, our Pye's were just about to receive the axe. Don 2ART got into the act also, all in all the club would have sounded busy on 40 and 6 mx. Understand Jack 2NC and Ken 2AVN are busy with gear for 432 Mc., best of luck fellas. Which reminds me I must get a grape-vine out on Wal 2MZ, hope you and yours are keeping well Wal. I hear 2TM will be doing his bird watching from Kingstable-land in future.

On the sick list for a few days was Keith 2ABK, looks like Keith can't take his own medicine, wonder how his patients make out. Allen 2ZFZ has been working cross town with Graham 2ZGW. I believe the t.v. was used as the receiver on this occasion and that the converter is well on the way. I also hear that Graham is keen to get our club net active again. Due to a few misunderstandings the club 80 metre antenna is still on the ground, but by all accounts it should not be long now, wait for it.

That Dave 2NK would be the hardest bloke to nab on the 600 ohm line ever. Even his own mob couldn't find him, wonder what new racket you are up to these days Dave? 2TM reckons I had my facts mixed up last month, well Trev we only print the facts as they come to ear, will speak to my spies!

Alec 2EX picked up a windfall in a 348 receiver a few weeks ago, good for you Alec. Well, till our next meeting at Lawson, 3rd Friday night. 73's, 2ADA.

THE NORTHERN DISTRICT RADIO CLUB

The bi-monthly meeting of the Club was held at Lennox Head on the 24th July, 1966. Members present were: VK's 2ACO, 2ZSW, 2ZFS, 2AGE, 2AEU, 2BGG, 2AAS, 2ZES, 2PF, 2ATI, 2ZLO, 2AEQ plus many XYLs and Harmonics.

Our meetings at this time of the year are always held on the 3rd Sunday so that members may take advantage of our northern winter sunshine. Our next meeting will be held on the 25th September, 1966, at the same place, so visitors please note the date; they will be most welcome to join us; just look for a mob of blokes who look like Hams, there is no mistaking them, and make yourself known.

The local club net on 3.6 Mc. every Thursday night needs some extra support, so members, what about it? 3.6 Mc., 8 p.m.—get on and give with the news!!!

VK2 DIVISION

Items listed in "A.R." under this heading are carried in the store conducted by the Division and are available to members of any Division of the W.I.A. Full details and items available are listed in a catalogue. A new issue is in course of preparation and will be available in the next few weeks.

The following 4 Mc. Crystals are available from the VK2 Store, $1 each or in groups of five for $4. (Some frequencies are running out—include second choice.)

4035, 4045, 4080, 4095, 4135, 4175, 4215, 4240, 4255, 4265, 4280, 4330, 4340, 4445, 4490, 4495, 4535, 4540, 4580, 4620, 4695, 4710, 4735, 4780, 4785, 4840, 4852.5, 4880, 4930, 4980, 4995. (5 Mc. Range next month.)

All inquiries to Radio Equipment Store, 14 Atchison St., Crows Nest, N.S.W.

Tape Lectures. Details were given last month on this service.

Tape No. 6. Elimination of T.V.I. ½ hour, 7 slides. Horrie Oakes, VK2FA.

7. Remote Control of Supervisory Equipment. 16 slides, Peter Griffin.

8. High Frequency Direction Finding. 1 hr. 30 slides. Joe Reed, VK2JR.

9. Phasing Filter S.S.B. (s.s.b.-2). 1½ hr., diagram and 1 slide. Joe Reede, VK2JR.

10. Silicon Rectifiers. 97 min. Paul Free.

These may be obtained by writing to Education Officer, Wireless Institute Centre, 14 Atchison St., Crows Nest, N.S.W.

• DISPOSAL BARGAINS •

AT OUR BULK DISPOSAL STORE

8 PARK STREET, GLENFERRIE, VIC. (OFF GLENFERRIE ROAD)

Phone 81-1935 (Mon. to Fri., 10 a.m. to 5 p.m.; Sat., 10 a.m. to 12.30 p.m.)

SWITCH BOARD

Completely wired, Type F. & F. T.M.C. C unit. Contains 26 key switches, 26 P.M.G. Plugs, 34 Drop Latches, hand-operated Genemotor for ringing. Size 20 in. wide, 18 in. deep, 21 in. high. Weight 60 lbs. **Price $25.**

CONDENSERS

50 uF. 200v., pigtail .... 20c ea., $2 dozen
500 uF. 12v., pigtail .... 20c ea., $2 dozen
12 uF. 50v., pigtail .... 20c ea., $2 dozen
3 uF. 100v., pigtail .... 10c ea., $1 dozen
10 uF. 25v., pigtail .... 10c ea., $1 dozen

PP/439/APG-30 POWER SUPPLY

Radar type, new. Contains 36 valves—8 6AQ5, 5 6X4, 4 12AX7, OA2, 2 6AK5, 3 6AL5, 2 12AT7, 2 2D21, 6AS6, 4 2C51, 2 6J6, 6AG5, 2 6AH6. Also twin 28v. blower motor, relays, variable conds., transformers, etc. 28v. 500 cycle. Ideal for wrecking. Sorry, no further information. Brand New. $35.

STEEL TRANSFORMER BOXES

6¼ x 9 x 5 inch with matching lid, air vents each end. Ideal for battery charger, etc. Unpainted, new. $1. Discount for quantity.

DURAL TUBING

¼ inch Tubing. 6 ft. lengths 36 ft. for $2 or 40c per 6 ft. length.

NEW TOGGLE SWITCHES

S.P.S.T. 5/- each. D.P.D.T. 10/- each.

POTENTIOMETERS

Wire Wound, 4 Watts, 1¾ inch diameter. Sizes available: 5, 10, 25, 50, 100, 250, 500, 10K, 50K ohms, 4/- each.

NEW CHANNEL LOCK PLIERS

Type 337W .... 20/- each
Type 356 End Cutters .... 20/- each

POWER TRANSFORMERS

1992	150-0-150v. 30 mA., 6.3v. 1.75a.	37/6	$3.75
1993	225v.-0-225v. 50 mA., 6.3v. 2a.	45/-	$4.50
2062	Voltage Doubler, 290, 265v. d.c. 80 mA., 6.3v. c.t. 2.25a.	67/6	$6.75
2064	Voltage Doubler, 340, 315v. d.c. 125 mA., 6.3v. c.t. 2.25a.	87/6	$8.75
2067	Voltage Doubler, 310, 285, 260v. d.c. 100 mA., 6.3v. c.t. 4a. ..	83/6	$8.35
	290-0-290v. 60 mA., 6.3v. 2a., 5v. 2a.	27/6	$2.75
	385-0-385v. 100 mA., 6.3v. 3a., 5v. 2a.	35/-	$3.50
	385-0-385v. 125 mA., 6.3v. 3a., 6.3v. 2a., 5v. 2a.	45/-	$4.50

BATTERY CHARGERS

Dual, c/w. Meter in Metal Hammertone Case

6 volt 4 amp., 12 volt 4 amp. 157/6 $15.75
6 volt 6 amp., 12 volt 6 amp. 217/6 $21.75

DISPOSAL METERS

G.E.C. Panel Meters, 50 mA., 3¼ inch round, 2½ in. round mounting hole. Brand new, $1.75

T.V. PROBES

American Precision, TV-5B, 480 Mc., 30,000 volt. Brand New carton. $8. 12 only.

BRACKET BEZAL LAMPS

½ inch diam. Bezal in Red, Amber, Green. Suit screw type globe. 35c, 4 for $1.20.

NEW WELWYN INSULATED METAL OXIDE

POWER RESISTORS

Wire Wound.

Available in following sizes: 10 ohms, 20, 30, 40, 50, 60, 68, 75, 82, 91, 100, 120, 150, 220, 270, 330, 370, 390, 470, 500, 560, 680, 720, 750, 820, 850, 1000, 1200, 1500, 1800, 2200, 2400, 2700, 3.3K, 3.9K, 4.3K, 4.5K, 4.7K, 5.6K, 6.8K, 8.2K, 10K, 12K, 15K, 18K, 22K, 24K, 25K, 27K, 33K, 35K, 39K, 47K, 56K, 68K ohms. Prices: 4 watts, 3/6; 8 watts, 4/6; 10 watts, 5/6.

TOLERANCE: Normal manufacturing tolerance plus or minus 5%.
Shelf Stability: Less than 2% over 12 hours.
Full Load Stability: For 2000 hours at 70 deg. C. less than 5%.
Long-term Stability: Less than 0.1% per 1000 hours.
Temperature co-efficient: Less than plus or minus 500 ppM/deg. C. from 0-125 deg. C.
Dielectric Strength: 600 volts R.M.S.
Encapsulation: Fireproof Silicone Cement.
Axial Leads: Minimum length 1¼ in.—21 s.w.g. dia.

MAGNETIC RELAYS

Sealed Type

24 volt, 670 ohms, D.p.d.t., size 2 x 1½ inch, Price 15/- ($1.50).
24 volt, 700 ohms, D.p.d.t., size 1½ x 1 inch, Price 15/- ($1.50).

NEW CHOKES

7-5H. 125 mA. 30/- ea. 14 H. 60 mA. 12/6 ea. 10 H. 4 mA. 12/6 ea.

NEW VALVE SOCKETS

4/250A Sockets .... 20/- each
Acorn ,, ... 3/6 ,,
EF50 ,, ... 2/6 ,,
VCR97 ,, ... 10/- ,,
805 ,, ... 12/6 ,,
EA50 ,, ... 2/6 ,,
5-pin ,, ... 2/6 ,,
6-pin ,, ... 2/6 ,,
7-pin ,, ... 2/6 ,,
7-pin P.T.F.E. Sockets .. .. 5/- ,,
Locktal P.T.F.E. Sockets .. .. 5/- ,,
Special completely shielded 7-pin P.T.F.E. socket and shield .... 10/- pair

ROTARY WAFER SWITCH

1 pole 24 position 3 bank. Physical size: 3 x 3 inch. Price 30/- ($3.00).

TRANSCEIVER

TR1987, English (later version of SCR522). 15 watts, 21 Valves. Freq. coverage: 115 to 145 Mc. Crystal locked receiver. Transmitter uses TT15 output valves. Three stage exciter using 4.86 Mc. crystal osc. 6AM5, doubler 6AM5, driver amp. QV04/7, p.a. amp. TT15. In-built modulator, complete with 26 volt genemotor. Condition as new. To clear £15 ($30). Circuit for above unit, 10/- each.

NEW PLUGS AND SOCKETS

Octal Plug .. .. 3/6 each
Octal Socket .... 1/6 ,,
5-pin Speaker Plugs .. .... 2/6 ,,
4-pin Speaker Plugs and Sockets .... 1/9 ,,
6-pin Jones Plugs and Sockets .... 7/6 ,,
Pye Plugs .... 2/- ,,
Pye double bulk Chassis Sockets .... 2/6 ,,

MODULATION AND DRIVER TRANSFORMERS

Modulation Transformer, 15 watts, pair of 6AQ5s to 2E26 valve.
Also Driver Transformer, single ended primary to push-pull grids of 6AQ5s.
£2 the lot, or Mod. Trans. 30/-, and Driver Trans. 10/-.

SPECIAL BARGAINS

Carpenter Relay and Socket, Type 3E1, 1800T 250 ohms, 900T 200 ohms, 15/-
P.M.G. Strip Boards, containing 24 Jacks .... 30/- each
P.M.G. Strip Boards, containing 48 Jacks .... 50/- each
Head Phone Cords, new .... 4/6 pair
3-pin Plug and two yds. Cord 4/6
Mixed bags of Resistors (50) 12/6
P/M Fuse Holders .... 4/6 each
72 ohm Co-ax Cable, 35 ft. lengths, 3/16 inch diameter 10/-
72 ohm Co-ax Cable, 27 yd. lengths, 3/16 inch diameter 20/-
Vibrators, 122 Type .... 20/- each
122 Aerial Packs .... 60/- each
12-core Cable with Plug, 22 yards long 50/-
Dural Tubing, 12 ft. lengths, ¼ inch diameter .... 3 for £1
P.M.G. Key Switches .... 7/6 each

P.M.G. TYPE

Standard Rack. 19 inch panels and chassis. All sizes. Plenty to choose from. Personal shoppers only.

HAM RADIO SUPPLIERS

Phone 81-1935 Established 1947

The coming field day, which is a combined VK2 and VK4 effort, is once again being held at Kingscliff on the 20th November, 1966, so all roll up and make this informal day one to remember.

Activity from this QTH has not been very great, 7 Mc. is worked every day at about 12.30 just to keep the cockroaches out of the rig. I believe Fred VK2PF and Ted VK2LT are getting their share of DX with their Swan 350's and I also believe Gordon VK2AGE is active on 14 Mc. s.s.b. with a home-brew rig. Bob VK2AAS has a filter job nearly ready to take the air, so we should hear some loud noises from Federal. John VK2KA and Ted VK2ZFS have been delegated to assemble gear for the forthcoming "Australis Satellite," so that it can be a combined club effort. Heard Graham VK2GJ putting in a S9 signal from Gulargumbone on 3.5 Mc. the other night, but he wouldn't respond to my call. Now that I know where all my r.f. was going I might have better luck next time.

Lindsay VK2ACO, our President, has at last got his tower up with an inverted Vee-Antenna hanging on it, but is not happy about the angle of the Vee.

Fred VK2PF came up with an excellent idea about QSL cards, but more about that when we have some definite information; all the gang was very taken with it.

Bob VK2ATI is all ready to go mobile on 6 mx, if only someone can decide on a net frequency, so he can get the suitable crystal.

Has anyone seen Harold VK2AWH, one missing Ham; the Department must have caught up with you at last O.M.

Well chaps, till next time, 73's, George 2AEQ.

— • • • —

VICTORIA

VICTORIAN DIVISION COUNCIL MEETING

The major portion of the July Council meeting was taken up with discussion with the Advisory Committee. The infringements of Regulations and bad operating procedures that have become prevalent over the last twelve months are causing concern both to the Committee and this Division. Some of the operating on 80 metres is especially obnoxious, more so as it can be heard over a much greater area than the practices of some 6 and 2 metre operators. The group amusing themselves by playing "Z" Cars on 6 metres may be under the impression they are humorists, but they are nothing but a pain in the neck to the serious operators wishing to use the band. It is most noticeable they do not give their call signs. The various net frequencies in the 6 and 2 metre bands are rapidly becoming "rag-chew" channels, which is far from the original intended use of these frequencies. It was ascertained that the present Advisory Committee is not large enough to watch all the bands and it has been agreed that extra personnel will be appointed to the Committee, and, if necessary, Observer stations will be appointed to assist the Committee to cover frequencies for which the Committee does not have equipment.

It was reported to Council that the response to the Membership Drive and the I.T.U. Appeal was gratifying in the short time that had elapsed since the letters were posted, and it was anticipated that results would improve before the end of the month.

It was decided that the President, Secretary and Treasurer would meet and draw up a budget for the last half of the year. The financial position at the end of July was satisfactory, but as most of our heavy expenses fall between now and Christmas, we must keep a very close watch on our general expenses. Other matters considered were W.I.C.E.N., the Instrument Library and the Minutes of the recent Federal Convention, which were ratified.

The August General Meeting was a most informative series of lectures ably handled by the fellows from Melbourne University who are responsible for the Australis Project. They gave a comprehensive description of the equipment, demonstrated the VK keyer, and with the aid of a vast amount of paper explained the method of predicting the times when the satellite will be in range.

The agenda item for September has not been finalised, but it is hoped to borrow a tape recorded lecture on the use of the Prediction Charts as used in "A.R." In October we will have a talk by Bill Rice VK3ABP on the weather satellites. Bill has done a lot of work in this direction and we hope to see copies of photographs he has received from the satellite.

I.T.U. FUND

The following contributions have been received during the last month:—

$10: Anonymous, VK3s KN, OG, AJT, AOK; $5: VK3s IV, DS; $4: VK3s AC, BW, NI; $3: VK3s XN, APG; $2.50: VK3FW, L3232; $2: VK3s BQ, CN, JL, NX, OW, PY, QC, WD, ADB, AFK, AHL, ALD, ARZ, ZAS, ZRA, ZXX, M. Hepner; $1.30: VK3ZHJ; $1: VK3s DA, JV, ASI, AUX, L3221, L3299, J. C. Belcher; $0.50: VK3ADA.

Accidentally missed from previous lists: $4: VK3ZFM; $2: VK3s AR, FZ.

EASTERN ZONE

I'm afraid that the news collected this month has been very sketchy as my activity on the bands has been quite low. 6 a.m. net has spasmodic activity and George 3ZCG has made contact with David 3DY and Rodney 3UG on the net frequency, with weak but readable signals, this is using ground-plane aerials to 3 element vertically polarised beam.

John 3AOJ is now on 80 and 40 with a borrowed 122, but hopes to have his own a.m.-c.w. rig going soon. John has also shifted recently to Sale. Philip 3ZTF has been posted to Townsville in VK4 so what is our loss is their gain. Maybe we'll hear you on 53.032 Mc. sometime. On going through the call book I find several inactive call signs listed down here in Sale, such as 3ACO, 3ASS, 3AFG, 3ZLM, and possibly 3ZHD, it's a pity that these licensees are not known to be active.

Attention PanSy or 5PS to you, I have the ideal anti-s.s.b. receiver, it will definitely make garbage out of any s.s.b. signal no matter how good the signal is. This is a commercially available receiver, and if a S.A.E. is sent I will write on asbestos what I think of it, perhaps. The moral is don't buy a receiver until you can try it out under normal operating conditions. This poor quality receiver is another reason why I couldn't get much in the way of news as most of the chaps in the Eastern Zone are on s.s.b.

Three cheers to 2ZRY for his article on conversion of Pye Reporters in the July issue of "A.R.," it has provoked quite a bit of interest down this way. Come to think of it, why don't a few of you other fellows send in an article on your gear, it could well be what someone else is looking for. Let's not complain that "A.R." has nothing in it, if this is so perhaps it is because nothing has been sent in. What about it chaps, and I don't mean just Eastern Zone chaps, it only takes an hour or so to write an article up. 73, 3UG.

WESTERN ZONE

Quite a number of chaps in the zone have sat for A.O.C.P. tickets. By the time these notes are published in "A.R." they should have the results. It will be interesting to see if it strikes up further activity in the zone by some of the older ones. The best of luck chaps.

Roy 3AOS tells me that the S.E.C. is due to connect the power at his QTH in a month or so.

I am running in a new vehicle at the moment so I took the opportunity of going over to see Herb 3NN and Garry 3ZOS to have a look at the new s.s.b. gear on 2 m. It is very nice indeed. I also called in on George 3ZEA who tells me he will be back on 2 m. after having trouble with t.v.i.

Bob 3ARM has a new rig on 80-10 m. which Rodney 3UG, now at Sale, built up for him, it sounds very nice. Bob tells me he is looking for DX now.

Two metres is very quiet with Herb about the only regular one on. Bill 3ZAX is rebuilding ready for the summer season.

Finally, from this QTH, have bought David 5AW's 432 Mc. gear. I have not tried it out yet but Herb and Ray 3ATN have both offered to listen for me. That is about the lot this month. 73's, Tony 5ZAI.

— • • • —

QUEENSLAND

TOWNSVILLE AND DISTRICT

Very sorry to pass on the news that after the last notes were sent in, Eddie 4WH had a sad bereavement in the loss of his wife. It was very sudden and took the local Amateurs by surprise. The funeral was attended by those that were available at the time. Eddie, who was the club secretary for such a long time has promised that he will again fill this role for the meantime.

The local club has difficulty in obtaining data on the A.O.C.P. courses either from the VK4 or VK2 Divisions and are now going to try VK3. Here is hoping that they will meet with success. It is being reported that there are quite a few inquiries being made into the procedure in obtaining the coveted ticket.

Andy VK3UJ has been and now wends his way farther north. Did attend the last meeting of the local club in company with VK3ZTF. Was fortunate to call Andy while he was in Mt. Isa to hear of his progress since his trip through the centre to Darwin. Now in the north he will miss that horrid winter weather in Melbourne. (5PS please note.)

Evie 4EQ now heard at long last using her own call, now Charlie will have to keep those antennae in first-class condition. Merv 4DV chasing all the DX that happens to break through to get the D.X.C.C., while Bert 4LB almost has the transceiver ready. Did notice Allan 4PS at the University the other night to hear the discussion on outer space, believe he wanted confirmation of where his signals are being lost. Must be those horrid Quassers. Len 4GD still heard working the east coast of W land. Never seems to get tired working Stateside. 73, Bob 4RW.

— • • • —

SOUTH AUSTRALIA

The monthly general meeting of the VK5 Division for July was held to a somewhat below average gathering of members and visitors, understandably so when it is remembered that the day had been one of the bleakest and most miserable days in the history of VK5 winters. A succession of rain, hail, snow yes, that's right—snow, thunder and lightning, in fact, the works, had followed in rapid succession all day, but despite this the gathering was reported as between 50 and 60 brave souls, which all in all can be considered as very good.

Outside of a letter from the VK3 Publications Committee being read to members, very little business, either Federal or Divisional, was discussed, and with Murray 5ZQ acting for George 5RX with the QSL cards, the business side of the meeting came to a halt. The letter discussed was pointing out that it costs money to delete the names of unfinancial members from the magazine mailing list and then to restore them to the list when the subs are paid. It was proposed by the magazine committee that the names be left off the list until perhaps November, and then restored, although going on the discussion which followed this did not meet with general approval. The treasurer, Harry 5MY was one of those against this proposal, and asked for permission to approach the com-

A & R TOROID BALUNS

General Specifications: Power rating—Types A, B, C, 200w. or 400w. p.e.p., provided the s.w.r. is less than 2:1. Construction—Toroidal ferrite cores, fully encapsulated with epoxy resin and silica under vacuum. Suitable for use in cold to sub-tropical areas. All except 355C and 356C are provided with antenna insulator support brackets. Balun dimensions approx. 2 in. diam. x 1 in. plus socket and lugs. Weight approx. 3¼ to 4 oz.

Type 350A—Impedance ratio 1 : 1. 75 ohms unbalanced to 75 ohms balanced. 3 to 30 Mc. For use at centre of a dipole antenna with co-axial cable feed line or at base end with 75 ohm twin line. Co-axial connector is Belling & Lee L604/S and lug terminals. **Price** $3.77 (inc. S.T.).

Type 351A Impedance ratio 1 : 4. 75 ohms unbalanced to 300 ohms balanced. 3 to 30 Mc. For use at centre of a folded dipole antenna with co-axial feed line or at base end with 300 ohm twin line connector and terminals as 350A. **Price** $3.77 (inc. S.T.).

Type 352A/BC—Details as 350A except frequency range 500 kc. to 5 Mc., or to 30 Mc., for receiving purposes only with increased attenuation. **Price** $3.77 (inc. S.T.).

Type 353B—This is a type 350 with a co-axial socket SO-239 (Amphenol screw type). **Price** $4.39 (inc. S.T.).

Type 354B—Type 351 with SO-239 co-axial socket. **Price** $4.39 (inc. S.T.).

Type 355C Impedance ratio 2.1 : 1. 52 ohms unbalanced to 25 ohms unbalanced. 3 to 30 Mc. For use at the base of a mobile whip antenna, coupled to fixed or adjustable transmitter output impedance. Lug terminals. **Price** $3.49 (inc. S.T.).

Type 356C—Impedance ratio 3.1 : 1. 78 ohms unbalanced to 25 ohms unbalanced. 3 to 30 Mc. Lug terminals. Use as 355C **Price** $3.49 (inc. S.T.).

WM. WILLIS & Co. Pty. Ltd.

430 Elizabeth Street, Melbourne

Phone 34-6539

NOW... PRINTED CIRCUITS TO YOUR OWN DESIGN!

Do you design your own circuits? All the advantages of printed circuits can be yours at modest cost. For many years Precision Windings have supplied printed circuits to Australian industry . . . and now streamlining of production techniques permits the economical manufacture of small quantities . . . even single circuit boards. You design and supply the artwork . . . we do the rest. Precision workmanship is guaranteed and delivery made **within 7 days.**

FREE!! As many enthusiasts will not be familiar with the preparation of "artwork", send a stamped, addressed envelope to us and we will forward a set of notes written to simplify preparation of "artwork". Instructions are clear and concise.

POST THIS COUPON NOW!

Please manufacture for me the printed circuits specified herewith in accordance with the artwork supplied.

Number required..... Scale of artwork.....

Size..... Area..... D/N.....

Phenolic paper circuits @ 5c per sq. in.	$
Epoxy paper circuits @ 8c per sq. in.	$
Epoxy glass circuits @ 10c per sq. in.	$
Holes drilled @ 5 for 1c (.2c ea.)	$
Cost of photonegative (fixed cost)	$3.00
Sales Tax (12½% or 25%)	$
Packing and registered postage	$0.50
Total	$

Please find cheque/money order/postal notes for total of $.....c..... (All cheques and money orders should be made payable to Precision Windings.)

NAME..... (BLOCK LETTERS)

ADDRESS.....

STATE..... OCCUPATION.....

PRECISION WINDINGS

52 CAMBRO RD., CLAYTON, VIC.
Phone 544-7370

mittee on this score, after there had been another speaker with the same idea. Permission was granted, and possibly more will be heard later.

The technical side of the meeting was then commenced, and the subject for the night was "Transistors in communication receivers," the guest speaker being a tape recording by 2ABB, and a collection of slides displayed at appropriate points to show just what could be done, and how. Ron 5KS, as programme organiser, manipulator of the slides and tape recorder, was suitably thanked for his efforts, and also asked to pass on the thanks of the meeting to the appropriate source, and one of the members asked if it would be possible to publish the circuits displayed in the Divisional Journal, and was assured that if at all possible, efforts would be made to oblige. Uncle Tom 5TL was one of the last to leave the meeting, and he arrived home at 10.15 p.m., so it seems that if the caretaker and his hound dawg are to continue to get their monthly frolic with the members, then I must start attending the meetings again, and if I might say so, reluctantly be forced to become controversial and difficult. 10.15 p.m.—I am ashamed and mortified! Come rain or shine, Ses 5GP always manages to attend the meetings, and when you remember the distance he has to travel it speaks volumes. He seemed very interested in getting his quota of cards from the bundle Murray 5ZQ brought in on behalf of George 5RX.

My special spy, who it will be remembered, is planted in Georgia Tech., Atlanta, Georgia, disguised as a statue in the garden, reports that I need not have any further worries that Bob (ex-5PU—now a W4) might be returning to VK and possibly going to VK3. He tells me that Bob is still coming home, but VK5 will come out on top after all, because the WRE is now prime favourite. Once again good has triumphed over evil—evil in this case being represented by VK3!

Had quite a chat with "Shep" 5DC at the last meeting and could not help but notice just how young and spry he looked. His appearance is very deceptive because he looks by far too young to be in the old-timer class, but it must be remembered that he cut his teeth in Amateur Radio back in the old 200 metre days, and there are not too many of those boys left now. He used to broadcast on Sundays, especially for the music lover, and his 20 or 30 piece orchestra, out on the tennis court, will be remembered by many listeners of that era, the quality and general high standard of which compared favourably with the commercial stations of that early time.

Talking of young old-timers, Arthur 5HY was sitting next to "Shep," and believe me, put these two in a bag and shake it up, and you would never know which one fell out—honestly. Perpetual youth, I suppose!

Received a letter from an ex-VK5 who is at the moment residing in VK2, not licensed these days, who said, among other things, that he had only just found out that I was the perpetrator of the VK5 notes, and was amazed somewhat because he did not remember me as much of a scholar at school. I was cut to the quick at this flattery, because if my correspondent had only stopped to think he would remember me as always getting high marks in speling, riting and ariffmetic—to say nothing of geeograffy and maffematics. Surely he must remember the number of times I was given the honour of sitting in the corner on the stool, with the badge of success in the form of a funny looking hat on my head! Nice to hear from you O.M.—and I have respected your desire to remain unmentioned by name. Surely they would not still be expecting to be paid!!

I suppose that VK3 thought that I would not see it. I suppose that VK3 thought that if they could sneak it through very quietly, nobody would utter a protest. Well—"Hawkeye Parsons" saw it and definitely registers a protest, and especially as I am an ex-VK3 President, if only for three minutes. Editor indeed—why was I not given a chance to vote?—do you see how insidious it becomes—firstly on the magazine committee—then on the editorial side as assistant—and then whoom-m-m—EDITOR. I write, more in anger than in sorrow—to think my old Division could do this to me. A booh, and a couple of diphthongs to Pincott 3AFJ.

Heard Ken 5IM hooked up with Tim 3TW and they both had a kindred subject in the prevalent cold weather. Tim's suggestion re two pairs of underpants seemed to meet with a chilly reception from Ken—Oh I am a one!

Frank 5MZ was another one to be complaining of the cold in his contact with Les 3AAO who managed to throw in a little snow on the subject, but Frank, not to be outdone, pulled out an ace from up his sleeve in the reply that some snow had fallen on Mount Lofty that afternoon. With true VK5 cunning he did not commit himself as to the quantity, but of course the quality of VK5 snow is not to be denied!

My mailbag this month was honoured by an epistle from VK2, from a gentleman who apparently felt that I was somewhat prejudiced against "The Thing." How he could have imagined such a thing is beyond me, but anyway I have written back to him with an explanation as to the facts of life in VK5 publicity, and I feel that we will become friends once again—Perhaps.

Strangely enough, I also received a communication from the same state, in which I was taken to task for "playing favourites."

CRYSTAL PYE DIVISION

Manufacturers of Quartz Crystals for Frequency Control and Crystal Filters for Highly Selective Circuits announce:—

NEW LOWER PRICES FOR CLOSE TOLERANCE GOLD PLATED CRYSTALS FOR AMATEUR APPLICATIONS

	Amateur Net (each includ. Tax)
• **1.8 Mc. to 14.999 Mc.** ±0.005% in Style "D" holders, ½" pin spacing	£2 8 6
• **15 Mc. to 47.999 Mc.** ±0.005% in Style "D" holders, ½" pin spacing	£2 10 6
• **48.0 Mc. to 61.0 Mc.** ±0.005% in Style "D" holders, ½" pin spacing	£2 16 3
• **100 Kc.** ±0.005% in HC13/U holders, ½" pin spacing*	£4 10 0
• **1 Mc.** ±0.005% in Style "D" holders, ½" pin spacing*	£4 10 0
* Specially designed for Crystal Calibrator purposes.	
• **455 Kc. nominal Crystals** for Filter applications in Style "D" or "E" (B7G) holders	£4 10 0

Many other types and tolerances are available from our standard production. Please consult us on your Crystal requirements.

PYE PTY. LTD. Terms: Cash with order. Please state Call Sign.

CLARINDA RD., CLAYTON, VIC. (P.O. Box 105). Phone 544-0361

STATE OFFICES IN ADELAIDE, BRISBANE, HOBART, PERTH AND SYDNEY

It appears that on occasions I have mentioned Muriel 2AIA—Hebe 2AOK—and Verle 2MR, but never Mona 2AXS. I was overcome with remorse to read such an accusation, and my only excuse for such ungallantry is the fact that up until now, Mona has only been a call sign, but rest assured, as from now I shall battle hard for an invitation to afternoon tea, or possibly a teeny-weeny piece of home-made sponge-cake made by the dainty hands of that charming representative of the female side of Amateur Radio in VK2 (how am I doing?) and if all that fails, I might be persuaded to send her off on a trip to Europe, etc., with someone else's husband!!!—No, not that again, I could not take the strain of another possible libel suit!

Jack 5LR and his XYL Flo have now both been discharged from hospital, and although I have not seen them personally, I gathered from my telephone conversation that all is now well again, although they both must take it easy for a while.

Brian 5FQ, although I only hear him occasionally on the air, is still going strong, and incidentally proved a friend indeed to Jack 5LR whilst he was in hospital. Calling in every day, helping out with the laundry situation whenever needed, and finally taking to bed himself with a bad cold. Look after him Allison—they don't make them any better, according to Jack.

Murray 5HH heard calling loud and long to try and raise Jack 5JS on 7 Mc. the other evening. Murray, of course, was mobile, and putting in an extra good signal to me, although apparently not strong enough to raise Jack, who remained conspicuous by his absence.

Jack 5LN has finally made up his mind that he must scale the heights, come what may. Heard discussing that he would have to raise his aerial higher at the chimney end, what a daredevil.

I thought for one second that I was going to have the pleasure of hearing John 5MX on 7 Mc. the other late afternoon. Heard a VK3 calling him and sat on the frequency, but nothing doing, although the VK3 gave him quite a good report. Never mind, John, I will get you yet, although it has been a long time now since we contacted.

Carl 5SS working Frank 5MZ—how unusual—the other night and was well into his stride when his XYL decided to make a few running repairs to his shack with an axe or something. Carl lost no time in changing over to Frank, whether from self-protection or in an endeavour to help her still remains a mystery.

Howard 5XA and Vic 5JH, if rumour can be believed, have been seen and heard from the Mount Pleasant area, which only goes to prove how keen some people can be, come rain or cold.

Joe 5JO soon off for a trip to Whyalla, although from his remarks he was not too sure just when he would be going. Not a bad idea Joe, wait for the finer weather.

Talking of Joe 5JO reminds me that he did me a good turn the other evening. He was in QSO with Athol 5LQ and happened to mention that the rain had just started down his way, which would be about three miles or so from, and right in the path of the rain to me. Knowing my XYL had some washing on the line, I called out to her that from the feel of my big toe it would be raining in about five minutes. She scampered out to the rotary line and just came back inside the house as the rain started. My big toe is now respected by all of the family and any visitors who will listen. Thanks Joe!!

Athol 5LQ heard the other night saying that he was off to a bowls match later on, and as he was playing with a partner the said partner would win them, and he would lose them. Nothing like confidence for a big game. Shame on you O.M.

Max 5OS is now the proud owner of a boat, plus a five-year-old harmonic who is pressing the claims of "going fishing," and as soon as is possible. Max has received plenty of advice, both on and off the air, as to the right things to say and do in the nautical world, especially as to the blunt end and the sharp end of the boat, bow and stern to you, plus thwarts and not seats, to say nothing of gunnel and not gunwale, and a host of new expressions which lead Max to think he is in a new world of language. To avoid a long list of comments from his possible gallery of "friends and wellwishers," he is keeping the date of the launching a secret, but he has promised me first consideration for the job of standing on the front—sorry—bow of the craft and putting out my hand as we go round the corners.

George 5CV, he of the missing receiver, had yet another intruder the other night, and is fast moving into the "not amused" category. The situation is now reaching the stage when a few land mines, etc., must be installed, and how.

Ron 5KS is now reported as having enough steel available to put up a tower in the vicinity of 60 feet or so. The only trick remaining is that about 4000 lb. of concrete is required for the base, and this is a fair lump of concrete in anyone's language. For the purpose of accuracy, my figures are plus or minus a thousand pounds or so!

Ern 5EN, of Port Pirie, heard to say that he has a 70-foot tower which is to hold a stack of beams for 20-15 and 10, plus stacked Yagis on 144 Mc. I also report, more in sorrow than in anger, that he also has a s.s.b. (The Thing to you) project under consideration.

Discoursing on the above sad topic, Les 5NJ on a recent visit to W land acquired a kit for "The Thing," which he duly constructed, and immediately diced the a.m. rig, only to be heard lately on 80 mx using a.m. as the mode. Tactful enquiries reveal that he now uses a.m. for local contacts, and "The Thing" for DX. How would he be?

Uncle Tom 5TL has been on holidays recently, and visited his beloved River Murray, cabin and all, and whilst in the region visited Hughie 5BC only to find that he was convelless—convelecc—convellesk — well, anyway, he was getting better after an attack of the "wog," and decidedly sick of being in bed.

Al 5EK, our genial and obliging secretary, is at the moment of writing on holidays also, but just as to where, when, how or why, I am not in the secret. Nevertheless, he can be trusted to thoroughly enjoy himself.

Noise limiters formed the basis of discussion on 80 mx one night recently between Moss 5TU—Len 5ZF—John 5JQ and Uncle Tom 5TL. Comment was about equal for and against, going on the experiences of those present, and the meeting closed with the fate of noise limiters still being in the balance.

Geoff 5TY, our recent representative up in the wilds of VK4, somewhat taken aback—to use his own expression—at the reference by a VK4 in the VK5 notes as to luxuriant mustaches, and demanding a copy of the letter. Fortunately I kept the epistle, and he has now retired to his sanctum sanctorium—or wherever it is that Federal Councillors retire to when hurt—to compose a suitable retort. Incidentally, he reports that his Vee Wee is doing nicely, thank you, after the operation of removing a broken valve stem with the valve head stuck, broken stem first, or something, in the cylinder head. He claims that the operation did not make expensive noises either. What it is to be in the genius class!

Comps 5EF recently held a gun at my head for our contact up at Oakbank, by demanding a QSL card or no more filling in as a correspondent during my absence. I somewhat reluctanly obliged, with suitable comment on the back!!

Well—VK4 and VK6 are showing signs of becoming restive again, so perhaps I had better close for this month, although as a matter of fact I am not too sure just how well this new Editor joker can handle a red pencil, and with this in view I have cut out the verbosity (long-winded to you) this month, but never fear, VK5 will be back next month, bigger and better than ever—I hope—How is my palsy-walsy Pincott 3AFJ, nothing trivial, I hope!! 73 re 5PS—PanSy to you.

STOP PRESS

The sudden passing of Les (8UX-5UX) just as these notes were about to be posted away, came as a shock to all VK5 members who knew him personally or had contacted him on the air. His jovial nature and keen interest in Amateur Radio always made his contacts interesting, and it was a pity that he did not reside in the city or suburbs at some time or other, as he would have made an excellent Council member, displaying as he did such keenness in the administrative doings of the Division. Les will be missed by all with whom he came in contact.

— . . . —

WESTERN AUSTRALIA

Now is the time for all good Hams to submit their R.D. logs! Time is running out so what about it you guys? So what, if you did only work the minimum number of stations, it's the log that counts. Ah well, no one can say that I didn't try—it's the old story, "You can lead a horse to water, etc., etc."

Institute meetings continue to be well attended, and it is pleasing to note the number of visitors to our ranks. Had the pleasure of meeting an old-timer (Ham-wise that is) at a recent meeting. VK6LU in person. Lou told me that after suffering a stroke some time back, he practised "brass pounding" to regain the use of his partially disabled hand. Now he's just about ready to come back on the breeze and dish it out with the best of them, probably better than some!

Heartiest congratulations to Clarrie VK6CP on being made a life member of the Division, a very fitting reward after many years of active Ham radio. Unfortunately Clarrie and his XYL have both been on the sick report for some time now and I am sure that their many friends join me in wishing them a speedy return to health.

The latest report from my spies indicates that Cedric 6CD has forsaken the gay lights (?) of the t.v. station and taken up duties in the teaching field. Has anyone tallied up the number of our VK6 Hams who are also in the teaching profession? Will someone let me know the answer please, I've just run out of fingers.

Not strictly under the heading of "Change of Occupation" is Mal 6SM, who has just branched out in business on his own account.

More good news to hand on the Youth Radio Scheme front. Reports from south of the river indicate that Doc 6AQ has found time among his many duties to organise a group of eager young beavers at Aquinas College. There should be no shortage of volunteers to climb trees and restore the missing half of that 40 metre wire now, Doc.

Still within the bounds of Aquinas, it may be of interest to members to learn that the "Eye on the Ionosphere" project has recorded no significant disturbance due to the Nuclear Experiments carried out by the Branch at the time of writing. However, Doc assures me that his eagle eye will continue to scan the charts for a while longer. The sky is no longer the limit it seems.

Talking of limits, reminds me of the time-worn phrase, "I'm running the LEGAL LIMIT—whatever that is." Ah well!

What is it about the north of our state which casts its magic spell on so many of our holidaying Hams? Some rude type dared to suggest that so many of them had worn out their welcome down south that north was the only way open to them. This, of course, is most untrue, they can still go east or west, or somewhere. Seriously though, I understand that our President has recently visited some of our northerly regions.

Recent whispers seem to point to more activity from south of the river again, where Roy 6RY is building a bigger and better Linear. Must be going to stir up some of the other Federal Councillors on the other side of the island.

It must be the association of ideas, but speaking of the other side of the rabbit-proof fence, reminds me of a very pleasant QSO I had recently. Laurie, ex-VK3VH now VK6VH, was on the other end, and at the time of the contact had been resident for about a month in our glorious sunny state. Welcome to the West, Laurie, hope that Swan and "trapped vertical" will make their presence felt on your return from holidays.

From smoke signals which I intercepted recently I gleaned the information that Bob 6KN is operating portable in Queensland. As soon as I saw that newspaper photo of that bikini-unclad girl armed with a smile and bagful of zacs I knew that before long the magic spell would exert its influence on some of us Westerners. Lucky guys!

If any of you hear an Aussie voice giving out with the Italian listen carefully because it will probably be Frank 6JK practising on his language course. On one of his rare appearances on the bands Frank mentioned that he had undertaken a course in Italian "as she is spoke." His interest in languages goes way, way back to schooldays when French was the order of the day. Another of his many interests is golf, so putting two and two together only confuses the issue, however, I suspect that the language study is only to enable him to address the ball without offending other players nearby.

A recent personal appearance at a meeting finally convinced most people that John 6ZW is still in the land of the living and tends to prove the claim that at least one of his transmissions was heard on 6 metres as far afield as Bunbury.

Bunbury, Bunbury, reminds me that Terry 6TK, ex-Norseman, is now a resident of that fair city. What about taking the wraps off the gear O.M. and appearing on the breeze, just to give us your impressions of the "heart of the South-West."

Herb 6XO is already preparing for summer and deep sea fishing by firing up the old 122, ready to install in the boat. Good, strong signal on 40 metres, too!

Of interest to all members of this division is the attempt to come together more closely with the W.A. V.H.F. Group to the mutual benefit of both bodies. Stay tuned for more news and progress reports from your Council members.

Well, that just about winds it up for now and remember—keep your weather eye open now that PanSy is toting his grease-gun.

73, de VK6DA.

TASMANIA

So the R.D. Contest is over again for another year, and although I can't say for sure, I reckon VK7 has won, but then people can be contrary creatures—maybe we could win, it's up to you, each and every one of you, to get that log posted away NOW. Do not procrastinate (that means delay, to save you looking it up). If you post your log then VK7 will win.

The last A.O.C.P. exams saw three Hobart "Z" calls (Winston ZAP, Mike ZAV, and Dave ZMD) trying for their c.w. and they appeared very confident, and are more than hopeful, Ian 7ZZ tells me there should be a further batch of 7 or 8 for the October exam (including me, so he says!). Ian is to be commended for the amount of time and effort he has put into the M.C.W. sessions, and at the time of writing is having a spell, before starting 3 nights a week again on 53.035 Mc., commencing on Tuesday, August 16 at 2000 hrs, then every Thursday, Sunday and Tuesday. Between times of course, he has still managed his usual amount of DX, and other divisional work, and yet he always seems to find time to help other Amateurs out, and should by now have his tower up and working.

Ted 7EB has been heard on the air a little more of late, and from what I've heard on the quiet, we could be hearing a lot more of him, too. Our other Ted 7EJ has promoted himself, or else someone did it for him, and now has a job which entails quite a bit of intrastate travel, so I've no doubt he'll have a s.s.b. mobile in the car before long. Talking of sideband, if 7WI isn't using this mode by now, then something is definitely wrong, we plan to be operational on s.s.b. by the 14th August, and you know what that day is, don't you?

At the July Council meeting, your Council had the usual yearly job of "dropping the axe," and I regret to say it fell 19 times, and it included some full members—too many full members!

Next year we intend to send everybody an account at the beginning of our financial year, so there will be no excuse for overlooking your sub.

Won't be long now till November, and that's Hamfest month, so start thinking about the last week-end of the 11th month, and try to make it this time for both the Saturday night and the Sunday.

Enough for now, see you again next month. 73, VK7ZAS.

A.O.C.P. CLASS ASSISTANT INSTRUCTOR

WANTED: An Assistant Instructor for A.O.C.P. Theory Class. One night weekly. Remuneration by arrangement. Apply in writing by the 7th September to the Secretary, W.I.A. Victorian Division, P.O. Box 36, East Melb'ne.

Repairs to Receivers, Transmitters; constructing and testing; xtal conv., any frequency; Q5-ers, R9-ers, and transistorised equipment.

ECCLESTON ELECTRONICS

146a Cotham Rd., Kew, Vic. Ph. 80-3777

Stockists of Radio and Electronic Components for the Amateur Constructor and Hobbyist

First Ring, Write or Call on

WILLIAM **WILLIS** & Co. Pty. Ltd.

430 Elizabeth St., Melb'ne. Ph. 34-6539

POWER TRANSISTORS

T-13: Ge/PNP 20W/3A/80V $1.15.

2N2990: Si/NPN 15W/1A/200V. $1.65.

Also various Diodes, SCRs and of course Computer Boards (20c per transistor). All post free.

AUSTRALIAN ELECTRONICS

76 View Street, Hobart, Tasmania

A. R. R. L.

Associate Memberships (and renewals) are available by forwarding $5.40 (plus 5c interstate cheques) to:

Business Manager, W.I.A.,
49 Cookson Street,
Camberwell, E.6,
Victoria.

This includes the regular arrival of

"QST"

HAMADS

Minimum 50c, for thirty words. Extra words, 2c each.

Advertisements under this heading will be accepted only from Amateurs and S.w.l's. The Publishers reserve the right to reject any advertising which, in their opinion, is of a commercial nature. **Copy** must be received at **P.O. Box 36, East Melbourne, C.2, Vic.,** by **5th of the month** and **remittance must accompany** the advertisement.

BC221 with calibration book and pwr. supply, $70. Phasing exciter s.s.b., home-brew, B & W. Q4 audio phase network, 9 Mc. xtal, Command v.f.o., v.o.x., 6AG7 output 80, 20 metres, plug-in coils, inc. pwr. supply, $40. VK-3ARP, Phone 85-1184.

CAMERA: 35 mm. Hanimex f3.5 50 mm. lens, coupled rangefinder, 8 speeds up to 1/300 sec., in leather carrying case, $16. Projector 9.5 mm. movie Pathescope H model with films including Charlie Chaplin and Laurel and Hardy, $30. Movie Camera 9.5 mm. Pathescope H model in leather carrying case with 3 close up lens, 3 filters and 9 cassettes, $20. VK3ZTY, 55 Salmon Ave., Essendon, Vic. Phone 379-4846.

COMM. RX: Star 600, 3-30 Mc. in twelve 600 kc. bands, xtal front-end, triple conv., selectivity 0.5 kc. to 4 kc., product detector, 100 kc. cal., a.n.l., S meter, fast/slow a.g.c., sensitive, selective, superb, worth $400, would like $300. Will accept offers. VK3WW, Phone 465-2991.

DO YOU KNOW anyone who has built an s.s.b. transistor transceiver, 80, 40, 20 metres using locally available parts? Please! Circuit details required by G. Robinson, 11 Bourke St., Ringwood, Vic. Phone 870-8085.

DRAKE 2B Receiver, excellent condition. Includes 230/110v. transformer, speaker, extra 10 metre xtal and instruction manual. J. Bail, VK-3ABA, 20 Relowe Cres., Box Hill North, Vic. Phone 89-8505.

FOR SALE: Swan Tri-Bander, 80-40-20 mx, 240w. p.e.p., complete with a.c. power supply, s.w.r. bridge and external v.f.o. in matching case. Very clean 2-unit station, $320. W. J. Bell, VK3WK, Staywood Park, Wangoom.

FOR SALE: Tunable I.F. Communications Receiver, 1650 to 2000 Kc., six multi-purpose tubes and eight silicon diodes, illuminated Collins-style dial, calibrated S meter, product detector, xtal locked b.f.o., squelch, professional finished. Complete with 2-valve xtal locked converter for 80 and 40 metres, $57. VK3ARZ, Lot 59, Orchard St., Glen Waverley, Vic. Phone 232-9492.

FOR SALE: 3 cm. Radar Base complete, and other microwave and radio equipment, test instruments, etc. Would consider exchange for other Ham equipment or c.r.o. Wanted: Voice Frequency Line Unit TH5/T9 for Teleprinter TT4/T9 or similar unit. Paul Kochan, Lot 15, Norris St., Rowville, Vic. Phone 75-97441.

MR3A three channel, superior set, professionally aligned, use with either a.c. or d.c. power supply. Gilbert J. Sones, VK3ZGS, Phone 28-2794.

QUAD spiderhead for tri-band quad with assembly instructions, $6. BC-348, a.c. supply built-in, $60. Near-new Philips t.v. camera, transistorised, Schneidar 1.4 16 mm. lens, video plus channels 0-1-2 output, 240v. a.c., $200. Wagner 1A 10-80 mx. Transceiver, two built-in v.f.o's, single 6146 output stage, vox crystal calibrator, u.s.b./l.s.b. incl., $300. A. Outtrim, VK2EX, 30 Boomerang Rd., Springwood, N.S.W.

SELL: Hallicrafter Amateur Band Rx Model SX117, 80 through 10 mx, provision for WWV and several other 500 kc. segments in 80/10 mx band, xtal locked front end, 3 positions of selectivity, excellent signal to noise ratio, a rx of high stability and performance, current production up to Jan. this year, Price $500. Companion Tx Model HT44, 200w. p.e.p., pair of 6DQ5s in final, exact match for the SX117, same size, finish and styling, both may be used as a transceiver, has v.o.x., push to talk, anti trip, a.m., s.s.b. upper and lower, c.w. price including Hallicrafter p/supply, $600. If both units taken $1000. This equipment was new early last year and is in as new condition. Supply voltage 110v. Phone 82-2152. 23 Tristania St., East Doncaster, Melb.

SELL: 522 Tx., $10. 522 Rx with electronic squelch, $14. Class "C" Wavemeter, $10. Genemotor 12v. d.c. input, 275v. at 110 mA. and 50v. at 50 mA., $5. Miniature genemotor in shielded case with fan, 12v. d.c. input, 250v. at 120 mA., $6. Rotary converter, 24v. d.c. input, 110v. a.c. 50 cycles output at 110 watts, $6. Small motor 6 or 12v. d.c., $6. VK3ZTY, 55 Salmon Ave., Essendon, Vic. Phone 379-4846.

WANTED: Galaxy V. or National NCX3 or similar, with commercial p/s. Full details, price, etc., Box 35, Narre Warren, Vic.

WANTED to Buy, borrow or rent for two weeks, Manual or Circuit of Swan 350. Bell, 53 Vasey Cr., Campbell, A.C.T. Phone (after 6) 4-6689. Call collect.

A LARGE RANGE OF TRANSMITTERS, RECEIVERS, TEST GEAR, AND DISPOSALS RADIO PARTS AVAILABLE

★ **COSSOR 339A DOUBLE BEAM C.R.O.**
D.c. 4 Mc. Blue trace, good condition, with spare 09J c.r.o. tube, comp. spare set new valves and handbook. One only at $70.

★ **MARCONI TF1101 R/C OSCILLATOR**
20 c.p.s. to 200 kc., 1% distortion, current model. $240.

★ **SR550 DUAL CONVERSION COM. RECEIVER**
160 metres to 6 metres, Amateur Bands only. 3.5 Mc. xtal band edge marker, xtal supplied, product detector for s.s.b. $240, 10% discount for cash.

★ **SCR522 V.H.F. TRANSMITTER/RECEIVER**
100-150 Mc. Complete with tubes, $28.

★ **COMMAND TRANSMITTERS**
4-5.3 Mc., 5.3-7 Mc. Complete with tubes, $15.

★ **TR3624 TRANSMITTER/RECEIVER**
Approximate frequency, 200 Mc. Contains 46 miniature tubes, $30.

★ **3J160E HIGH POWER TRIODES**
120 Mc. full ratings. Heater 10v. 29a., anode max. volts 3000v., anode max. current 1000 mA., r.f. output 2150 watts. $8 each.

WANTED TO BUY

Communication Receivers, Test Equipment, etc. Call, write or phone. Equipment inspected and picked up at your convenience any night or week-end.

★ **VALVES**
EF50, 20c ea.; 7C7, 10c ea.; CV131, 6CQ6, 50c ea.; 6AC7, 20c ea.; 6AL5, 20c ea.; 6C4, 6AM5, 50c ea.

★ **SIGNAL GENERATORS**
Type LSG10, 120 Kc. to 260 Mc., $26. Type LSG11, 120 Kc. to 390 Mc., provision for xtal, $30, both plus freight.

TE22 Audio Generator, freq. range: sine 20 c.p.s. to 200 kc., square 20 c.p.s. to 25 kc., in four ranges. Output, 7v. p-peak. Output impedance, 1,000 ohms. Price $42.

★ **METERS, P25 TYPE**
0-500 uA., $5.25; 0-100 uA., $6.95; 0-1 mA., $4.50; 0-10 mA., $4.50; 0-50 mA., $4.50. Full range of Meters and Multi-Testers available.

★ **CO-AXIAL CABLE**
UR70 72 ohms, 3/16 inch diam., in 27-yard rolls, $2 plus 75c pack and post. In as-new condition.

★ **RA1B COMMUNICATIONS RECEIVER**
150 Kc. to 15 Mc. in six bands. B.f.o., etc. Genuine original condition, with a.c. power supply, $70.

★ **TRANSISTORS**
Brand new. OC72, OC44, 2N132, OC66, OC45, 80c each. AT1138 Power Transistor, 30w., Class B, $3. Also Diodes: OA71, OA81, OA95, 35c each.

★ **SR700A TRIPLE CONVERSION COM. RECEIVER**
80 metres to 10 metres. 1st and 3rd oscillators xtal controlled, 3.4-4.0 Mc. tunable i.f., selectable sidebands, 85 : 1 geared dial, v.f.o. output for transceive operation, selectivity: 0.5, 1.2, 2.5, 4 kc. Internal 1 Mc. xtal calibrator (xtal supplied). Undoubtedly the finest receiver ever to come out of Japan. $500, 10% discount for cash.

★ **MILLER 455 Kc. PRE-WIRED I.F. STRIPS**
Comprises two i.f. stages, ceramic filter, diode detector, 55 db. gain, NPN silicon transistors, d.c. requirements 6v. d.c. 2 mA., size 1½ x ½ x ½ inch. $8.70 inc. tax.

★ **TR10A MULTIMETERS**
100,000 ohms per volt. Ranges, d.c. volts: 0.5, 2.5, 10, 50, 250, 500, 1K.; a.c. volts: 2.5, 10, 50, 250, 1K; d.c. current: 10 uA., 1 mA., 25 mA., 250 mA., 10 amp.; resistance: 20K, 200K ohms, 2 megohms, 20 megohms. To clear, $25.95.

★ **POTENTIOMETERS**
Wire wound, 40c each; carbon, 25c each.

★ **RESISTORS**
¼ watt, I.R.C., Welwyn, Eire, Ducon, Philips, $2 per 100.

★ **¾ H.P. 2-STROKE MOTORS**
Ohlsson and Rice. Brand new, just imported from America. Weighs only 5¾ lbs. 6,300 r.p.m., supplied with 3 : 1 reduction gearbox, output 2,100 r.p.m. Ideal for driving Alternators for Field Days. Fuel consumption 1 pint per hour. $30.

ANY QUERIES

Beginners are welcome, ask Jim and Laurie Gardiner any questions. They are Amateur Radio operators and will be only too pleased to assist.

★ **CRYSTALS**
Personal shoppers only, $1 each.

★ **SPECIALS**
3AP1 c.r.o. tubes. New in cartons, $1.25.

3000 type Relays, 50c each.

Inter-Office Phones, 15-station type, $4 each.

7-pin skirted Valve Sockets, P.T.F.E. insulation, silver plated, only 20c each, c/w. shield.

Speaker Transformers: 7000 ohms to 2 ohms; 10,000 ohms to 3.5 ohms; 50c each.

9-pin skirted P.T.F.E. Valve Sockets with shield, 50c each.

Irish Recording Tape, Mylar Base: 150 ft. x 3 in., 75c; 900 ft. x 5 in., $2.75; 1150 ft. x 6¾ in., $3.50; 1800 ft. x 7 in., $4.75.

3 uF. 1000v. d.c. Block Capacitors. Only 25c each or $2 per dozen.

★ **MINIATURE CAPACITORS**
New shipment. 600 v.w. Values: 0.001, 0.02, 0.005, 0.0005, 0.0002, 0.0001 uF. $2 for 80, plus freight.

ALL ITEMS FREIGHT EXTRA

UNITED TRADE SALES PTY. LTD.

280 LONSDALE ST., MELBOURNE, VIC. (Opp. Myers) Phone 32-3815

WARBURTON FRANKI

now distributors of

"SANWA" MULTITESTERS

For accuracy, reliability and versatility, choose "SANWA" Multitesters. You are assured of unsurpassed Tester performance, the result of SANWA's experience in Tester making since its establishment in 1937.

MODEL 320-X

● 20-microampere high sensitivity meter. ● Will show its efficiency in measuring minute current and high resistance. ● Best suited for the use of senior servicemen and in laboratories.

Measurement Ranges:

D.C. V.: 5, 25, 100, 250, 500v (50k ohm/v.); 1000, 5000v. (25k ohm/v.).
A.C. V.: 5, 25, 100, 250, 500, 1000v. (5k ohm/v.).
D.C. A.: 25μA.; 2.5, 25, 250 mA.
OHM: 0 to 10k, 0 to 100k, 0 to 1 mg., 0 to 100 mg. (min. 2 ohm and max. 100 mg. ohm).
DB.: — 20 to plus 16 to plus 62 db.
Batteries: 1.5v. (UM-2) x 1 and 22.5v. (BL-015) x 1.
Size: 6⅝ in. x 5⅛ in. x 3⅜ in.
Weight: 3.2 lb.

Price: $29.50 plus S.T. 12½%

MODEL 370-ES

● Specially designed A.C. current ranges measure up to 10 amperes. ● Germanium diode rectifiers. ● Wide-range and versatile instrument for all-round service and laboratory use. ● Diode protected.

Measurement Ranges:

D.C. V.: 0.5, 2.5, 10, 50, 250, 500, 1000, 5000v (20k ohm/v.).
A.C. V.: 2.5, 10, 50, 250, 1000v. (4k ohm/v.).
D.C. A.: 50 μA.; 1, 10, 50, 250 mA.; 1, 10 a.
A.C. A.: 250 mA.; 1, 10 a.
OHM RX1, RX100, RX1000, RX10000 (min. 1 ohm and max. 50 mg. ohm).
DB. — 20 to plus 10 db. plus 10 to plus 35 to plus 63 db.
Batteries: 1.5v. (UM-2) x 2 and 22.5v. (BL-015) x 1.
Size: 7 in. x 5¼ in. x 3¼ in.
Weight: 3.1 lb.

Price: $34.50 plus S.T. 12½%

MODEL 380-C

● High-grade circuit tester of 30-microampere sensitivity. ● Ruggedly constructed to withstand the wear and tear of heavy-duty service. ● Large mirrored scale dial for accurate reading.

Measurement Ranges:

D.C. V.: 0.3, 3, 12, 60, 300v. (33.3k ohm/v.), 1200, 3000 v. (16.6k ohm/v.).
A.C. V.: 3, 12, 30, 120, 300, 1200v. (5k ohm/v.).
D.C. A.: 30 μA.; 3, 30 300 mA.
OHM X1, X10, X100, X1000 (min. 0.5 ohm and max. 20 mg. ohm).
D.B.: — 20 to plus 10 to plus 23 db. up to plus 63 db.
*μF. (C): 0.001 to 100 μF.
*H (L): 0.1 to 2000H.
Batteries: 1.5v. (UM-3) x 4 and 1.5v (UM-2) x 1.
Size: 7¼ in. x 5 in. x 4 in.
Weight: 2.5 lb.
* Use external power.

Price: $23.50 plus S.T. 12½%

MODEL U-50

● Handy meter of 35-microampere sensitivity.

Measurement Ranges:

D.C. V.: 0.1, 0.5, 5, 50, 250, 1000v. (20k ohm/v.).
A.C. V.: 2.5, 10, 50, 250, 1000v. (8k ohm/v.).
D.C. A.: 50 μA.; 0.5, 5, 50, 250 mA.
OHM: RX1, RX10, RX100, RX1k (min. 1 ohm and max. 5 mg. ohm).
DB.: — 20 to plus 62 db.
*μF. (C): 100 pF. to 0.2 μF.
*Megohm: 1 to 500 mg. ohm.
Batteries: 1.5 v. (UM-3) x 2.
Size: 5⅛ in. x 3¼ in. x 1½ in.
Weight: 13.3 oz.
* Use external power.

Price: $13.50 plus S.T. 12½%

MODEL 370-X

● Multi-purpose tester covering practically all measuring requirements. ● Two current ranges afford the meter a dual function as a circuit tester and A.C.-D.C. ammeter.

Measurement Ranges:

D.C. V.: 3, 6, 12, 120, 300, 1200, 3000v. (4k ohm/v.).
A.C. V.: 6, 12, 120, 300, 1200, 3000v. (4k ohm/v.).
D.C. A.: 0.3, 3, 30 300 mA.; 3, 12 a.
A.C. A.: 3, 12 a.
OHM: R, 10R, 100R, 1000R (min. 2 ohm and max. 10 mg. ohm).
DB.: — 10 to plus 17 db., 0 to plus 23 to plus 63 db.
Batteries: 1.5v. (UM-2) x 2 and 22.5v. (BL-015) x 1.
Size: 6⅝ in. x 5⅛ in. x 3⅝ in.
Weight: 2.6 lb.

Price: $20.50 plus S.T. 12½%

MODEL P-1B

● Rugged and accurate midget tester. ● Miniatured to the limit of practical use. ● Useful to check all sorts of electrical home appliances.

Measurement Ranges:

D.C. V.: 10, 50, 250, 1000v. (1k ohm/v.).
A.C. V.: 10, 50, 250, 1000v. (1k ohm/v.).
D.C. A.: 100 mA.
OHM: 0.1, 100k ohm (midscale — 25k ohm).
DB.: — 10 to plus 22 db. plus 20 to plus 36 db.
*μF & H.: 0.001 to 0.1 μF. and 10 to 1000H.
Battery: 1.5v. (UM-3) x 1.
Size: 4⅛ in. x 2⅞ in. x 1½ in.
Weight: 9 oz.
* Use external power.

Price: $6.25 plus S.T. 12½%

MODEL F-7TR

● The unique range selector is really epoch-making, a red ball appearing in the slot on a clear acrylic dial. ● Half in size compared with conventional testers. ● The meter self-checks the internal batteries.

Measurement Ranges:

D.C. V.: 0.25, 2.5, 10, 50, 250, 1000v. (20k ohm/v.).
A.C. V.: 2.5, 10, 50, 250, 1000v. (8k ohm/v.).
D.C. A.: 50 μA.; 0.5, 5, 50, 250 mA.
OHM: RX1, RX10 RX100, 50M (min. 1 ohm and max. 50 mg. ohm).
DB.: — 10 to plus 36 db.
L.I.: 20, 2, 0.2 mA.
Batteries: 1.5v. (UM-3) x 1 and 22.5v. (BL-015) x 1.
Size: 3⅜ in. x 3½ in. x 1¾ in.
Weight: 14.4 oz.

Price: $22.50 plus S.T. 12½%

WARBURTON FRANKI

220 PARK ST. SOUTH MELB., VIC. PHONE 30 lines **69-0151**

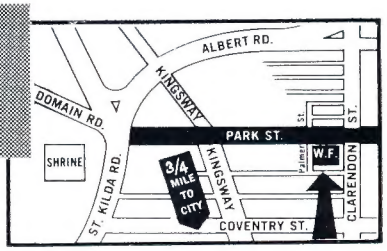

Please include postage or freight with all orders